มาตรฐานผลิตภัณฑ์อุตสาหกรรม

THAI INDUSTRIAL STANDARD

มอก. 61730 เล่ม 2-2567

IEC 61730-2:2023

คุณสมบัติด้านความปลอดภัยของแผงเซลล์แสงอาทิตย์

เล่ม 2 ข้อกำหนดสำหรับการทดสอบ

PHOTOVOLTAIC (PV) MODULE SAFETY QUALIFICATION -
PART 2: REQUIREMENTS FOR TESTING

ห้ามทำซ้ำเพื่อการจำหน่ายจ่ายแจก

สำนักงานมาตรฐานผลิตภัณฑ์อุตสาหกรรม

กระทรวงอุตสาหกรรม ICS 27.160 ISBN (e-book) 978-616-617-430-4

ห้ามทำซ้ำเพื่อการค้าหน่ายจ่ายแจก

มาตรฐานผลิตภัณฑ์อุตสาหกรรม
คุณสมบัติด้านความปลอดภัยของแผงเซลล์แสงอาทิตย์
เล่ม 2 ข้อกำหนดสำหรับการทดสอบ

มอก. 61730 เล่ม 2-2567

สำนักงานมาตรฐานผลิตภัณฑ์อุตสาหกรรม
กระทรวงอุตสาหกรรม ถนนพระรามที่ 6 กรุงเทพฯ 10400
โทรศัพท์ 0 2430 6815

ห้ามทำซ้ำเพื่อการจำหน่ายจ่ายแจก

ประกาศในราชกิจจานุเบกษา ฉบับประกาศและงานทั่วไป เล่ม 142 ตอนพิเศษ 66 ง
วันที่ 13 กุมภาพันธ์ พุทธศักราช 2568

คณะกรรมการวิชาการรายสาขา คณะที่ 77
ระบบเซลล์แสงอาทิตย์

ประธานกรรมการ

นายธีรยุทธ์ เจนวิทยา	ผู้ทรงคุณวุฒิจากมหาวิทยาลัยเทคโนโลยีพระจอมเกล้าธนบุรี

กรรมการ

นายนิพนธ์ เจ็ดศิริ	ผู้ทรงคุณวุฒิ
นายเรืองฤทธิ์ หนิแหนะ	ผู้ทรงคุณวุฒิจากศูนย์ทดสอบผลิตภัณฑ์ไฟฟ้าและอิเล็กทรอนิกส์
นายวัชรินทร์ บุญฤทธิ์	ผู้ทรงคุณวุฒิจากกรมพัฒนาพลังงานทดแทนและอนุรักษ์พลังงาน
นายวิชชุ ศรีทอง	ผู้ทรงคุณวุฒิจากการไฟฟ้าฝ่ายผลิตแห่งประเทศไทย
นายวุฒิชัย สราญรมย์	ผู้ทรงคุณวุฒิจากการไฟฟ้านครหลวง
นายเอกดนัย เขียวมา	ผู้ทรงคุณวุฒิจากการไฟฟ้าส่วนภูมิภาค
นายวุฒิพงศ์ สุพนธนา	ผู้ทรงคุณวุฒิจากสภาอุตสาหกรรมแห่งประเทศไทย
นายภาณุ ถนอมวรสิน	ผู้ทรงคุณวุฒิจากสมาคมอุตสาหกรรมเซลล์แสงอาทิตย์ไทย

กรรมการและเลขานุการ

นางสาวศรนรินทร์ แสงคะนอง	ผู้ทรงคุณวุฒิจากสำนักงานมาตรฐานผลิตภัณฑ์อุตสาหกรรม

กรรมการและผู้ช่วยเลขานุการ

นางสาวอนรรฆวี สิงห์ลอ	ผู้ทรงคุณวุฒิจากสำนักงานมาตรฐานผลิตภัณฑ์อุตสาหกรรม

ห้ามทำซ้ำเพื่อการจำหน่ายโดยเด็ดขาด

มาตรฐานผลิตภัณฑ์อุตสาหกรรม คุณสมบัติด้านความปลอดภัยของแผงเซลล์แสงอาทิตย์ เล่ม 2 ข้อกำหนดสำหรับการทดสอบ ได้ประกาศใช้ครั้งแรกเป็น มาตรฐานเลขที่ มอก. 2580 เล่ม 2-2555 ประกาศในราชกิจจานุเบกษา ฉบับประกาศและงานทั่วไป เล่ม 130 ตอนพิเศษ 50 ง ลงวันที่ 22 เมษายน พุทธศักราช 2556 และได้ประกาศยกเลิกและกำหนดเป็น มาตรฐานเลขที่ มอก. 2580 เล่ม 2-2562 ประกาศในราชกิจจานุเบกษา ฉบับประกาศและงานทั่วไป เล่ม 137 ตอนพิเศษ 28 ง ลงวันที่ 4 กุมภาพันธ์ พุทธศักราช 2563 ต่อมาสาระสำคัญทางวิชาการเปลี่ยนแปลงไปเพื่อให้สอดคล้องกับเทคโนโลยีในปัจจุบัน จึงได้แก้ไขปรับปรุงโดยยกเลิกมาตรฐานเดิมและกำหนดมาตรฐานนี้ ขึ้นใหม่

มาตรฐานผลิตภัณฑ์อุตสาหกรรมนี้กำหนดขึ้นโดยรับ IEC 61730-2 Edition 3.0 (2023-09) Photovoltaic (PV) module safety qualification - Part 2: Requirements for testing มาใช้โดยวิธีพิมพ์ซ้ำ (reprinting) ในระดับเหมือนกันทุกประการ (identical) โดยใช้ IEC ฉบับภาษาอังกฤษเป็นหลัก

ห้ามทำซ้ำเพื่อการค้าหน่วยงานเอกชน

คณะกรรมการมาตรฐานผลิตภัณฑ์อุตสาหกรรมได้พิจารณามาตรฐานนี้แล้ว เห็นสมควรเสนอรัฐมนตรีประกาศตามมาตรา 15 แห่งพระราชบัญญัติมาตรฐานผลิตภัณฑ์อุตสาหกรรม พ.ศ. 2511 ซึ่งแก้ไขเพิ่มเติมโดยพระราชบัญญัติมาตรฐานผลิตภัณฑ์อุตสาหกรรม (ฉบับที่ 7) พ.ศ. 2558

ห้ามทำซ้ำเพื่อการจำหน่ายจ่ายแจก



ประกาศกระทรวงอุตสาหกรรม
เรื่อง กำหนดมาตรฐานผลิตภัณฑ์อุตสาหกรรม คุณสมบัติด้านความปลอดภัยของแผงเซลล์แสงอาทิตย์
เล่ม ๒ ข้อกำหนดสำหรับการทดสอบ
พ.ศ. ๒๕๖๗

โดยที่เป็นการสมควรปรับปรุงมาตรฐานผลิตภัณฑ์อุตสาหกรรม คุณสมบัติด้านความปลอดภัยของแผงเซลล์แสงอาทิตย์ เล่ม ๒ ข้อกำหนดสำหรับการทดสอบ มาตรฐานเลขที่ มอก. 2580 เล่ม 2 - 2562

อาศัยอำนาจตามความในมาตรา ๑๕ แห่งพระราชบัญญัติมาตรฐานผลิตภัณฑ์อุตสาหกรรม พ.ศ. ๒๕๑๑ ซึ่งแก้ไขเพิ่มเติมโดยพระราชบัญญัติมาตรฐานผลิตภัณฑ์อุตสาหกรรม (ฉบับที่ ๗) พ.ศ. ๒๕๕๘ รัฐมนตรีว่าการกระทรวงอุตสาหกรรม จึงออกประกาศตามข้อเสนอของคณะกรรมการมาตรฐานผลิตภัณฑ์อุตสาหกรรม ไว้ดังนี้

ข้อ ๑ ประกาศนี้เรียกว่า “ประกาศกระทรวงอุตสาหกรรม เรื่อง กำหนดมาตรฐานผลิตภัณฑ์อุตสาหกรรม คุณสมบัติด้านความปลอดภัยของแผงเซลล์แสงอาทิตย์ เล่ม ๒ ข้อกำหนดสำหรับการทดสอบ พ.ศ. ๒๕๖๗”

ข้อ ๒ ประกาศนี้ให้มีผลเมื่อพ้นกำหนดหนึ่งร้อยยี่สิบวัน นับแต่วันประกาศในราชกิจจานุเบกษาเป็นต้นไป

ข้อ ๓ ให้ยกเลิกประกาศกระทรวงอุตสาหกรรม ฉบับที่ ๕๖๒๗ (พ.ศ. ๒๕๖๒) ออกตามความในพระราชบัญญัติมาตรฐานผลิตภัณฑ์อุตสาหกรรม พ.ศ. ๒๕๑๑ เรื่อง ยกเลิกและกำหนดมาตรฐานผลิตภัณฑ์อุตสาหกรรม คุณสมบัติด้านความปลอดภัยของแผงเซลล์แสงอาทิตย์ เล่ม ๒ ข้อกำหนดสำหรับการทดสอบ ลงวันที่ ๑๐ ตุลาคม พ.ศ. ๒๕๖๒

ข้อ ๔ ให้กำหนดมาตรฐานผลิตภัณฑ์อุตสาหกรรม คุณสมบัติด้านความปลอดภัยของแผงเซลล์แสงอาทิตย์ เล่ม ๒ ข้อกำหนดสำหรับการทดสอบ มาตรฐานเลขที่ มอก. 61730 เล่ม 2 - 2567 ขึ้นใหม่ดังมีรายละเอียดท้ายประกาศนี้

ประกาศ ณ วันที่ ๒๗ ธันวาคม พ.ศ. ๒๕๖๗

เอกนัฏ พร้อมพันธุ์

รัฐมนตรีว่าการกระทรวงอุตสาหกรรม

ห้ามทำซ้ำเพื่อการค้า สำนักวิทยบริการฯ จุฬาฯ

ห้ามทำซ้ำเพื่อการค้าหน่ายจ่ายแจก

มาตรฐานผลิตภัณฑ์อุตสาหกรรม
คุณสมบัติด้านความปลอดภัยของแผงเซลล์แสงอาทิตย์
เล่ม 2 ข้อกำหนดสำหรับการทดสอบ

มาตรฐานผลิตภัณฑ์อุตสาหกรรมนี้กำหนดขึ้นโดยรับ IEC 61730-2 Edition 3.0 (2023-09) Photovoltaic (PV) module safety qualification - Part 2: Requirements for testing มาใช้โดยวิธีพิมพ์ซ้ำ (reprinting) ในระดับเหมือนกันทุกประการ (identical) โดยใช้ IEC ฉบับภาษาอังกฤษเป็นหลัก

1 ขอบข่าย

ขอบข่ายของ IEC 61730-1 ใช้กับมาตรฐานผลิตภัณฑ์อุตสาหกรรมนี้ ซึ่ง IEC 61730-1 แสดงข้อกำหนดสำหรับการสร้าง และมาตรฐานผลิตภัณฑ์อุตสาหกรรมนี้แสดงรายการทดสอบสำหรับแผง PV ที่จำเป็นสำหรับคุณสมบัติด้านความปลอดภัย มาตรฐานผลิตภัณฑ์อุตสาหกรรมนี้ใช้สำหรับคุณสมบัติด้านความปลอดภัยเท่านั้นโดยใช้ร่วมกับ IEC 61730-1

ลำดับของการทดสอบที่กำหนดในมาตรฐานผลิตภัณฑ์อุตสาหกรรมนี้อาจไม่ครอบคลุมการทดสอบความปลอดภัยในทุกด้านของการใช้งานแผง PV มาตรฐานผลิตภัณฑ์อุตสาหกรรมนี้มีลำดับขั้นตอนการทดสอบดีที่สุดในขณะที่จัดทำ

มาตรฐานผลิตภัณฑ์อุตสาหกรรมนี้มีวัตถุประสงค์เพื่อจัดเตรียมลำดับการทดสอบสำหรับการตรวจสอบความปลอดภัยของแผงเซลล์แสงอาทิตย์ ซึ่งการสร้างประเมินตาม IEC 61730-1 ลำดับการทดสอบและเกณฑ์ตัดสินออกแบบเพื่อตรวจสอบการชำรุดของส่วนประกอบภายในและภายนอกของแผงเซลล์แสงอาทิตย์ที่อาจเกิดขึ้น ส่งผลให้เกิดไฟไหม้ การช็อกไฟฟ้าและ/หรือการบาดเจ็บของบุคคล มาตรฐานผลิตภัณฑ์อุตสาหกรรมนี้แสดงข้อกำหนดสำหรับการทดสอบความปลอดภัยพื้นฐานและการทดสอบเพิ่มเติมที่เป็นฟังก์ชันการใช้งานของแผงเซลล์แสงอาทิตย์ หมวดหมู่การทดสอบรวมถึงการตรวจสอบทั่วไป อันตรายจากการช็อกไฟฟ้า อันตรายจากไฟไหม้ ความเค้นทางกลและความเค้นจากสิ่งแวดล้อม

ข้อกำหนดเพิ่มเติมของการทดสอบที่ระบุในมาตรฐาน ISO ที่เกี่ยวข้อง หรือมาตรฐานระดับประเทศหรือท้องถิ่น หรือมาตรฐานที่เกี่ยวข้องกับการติดตั้งหรือการใช้งานแผง PV ในสถานที่ที่ต้องการ ได้รับการพิจารณาเพิ่มเติมจากข้อกำหนดที่อยู่ในมาตรฐานผลิตภัณฑ์อุตสาหกรรมนี้

2. เอกสารอ้างอิง

รายละเอียดให้เป็นไปตาม IEC 61730-2:2023 ข้อ 2.

3. บทนิยาม

รายละเอียดให้เป็นไปตาม IEC 61730-2:2023 ข้อ 3.

4. หมวดหมู่การทดสอบ

รายละเอียดให้เป็นไปตาม IEC 61730-2:2023 ข้อ 4.

5. ประเภทและขั้นตอนการทดสอบที่จำเป็น

รายละเอียดให้เป็นไปตาม IEC 61730-2:2023 ข้อ 5.

6. การสุ่มตัวอย่าง

รายละเอียดให้เป็นไปตาม IEC 61730-2:2023 ข้อ 6.

7. รายงานการทดสอบ

รายละเอียดให้เป็นไปตาม IEC 61730-2:2023 ข้อ 7.

8. การทดสอบ

รายละเอียดให้เป็นไปตาม IEC 61730-2:2023 ข้อ 8.

9. เกณฑ์ตัดสิน

รายละเอียดให้เป็นไปตาม IEC 61730-2:2023 ข้อ 9.

10. ขั้นตอนทดสอบ

รายละเอียดให้เป็นไปตาม IEC 61730-2:2023 ข้อ 10.

ภาคผนวก

รายละเอียดให้เป็นไปตาม IEC 61730-2:2023 ภาคผนวก

บรรณานุกรม

รายละเอียดให้เป็นไปตาม IEC 61730-2:2023 บรรณานุกรม

ห้ามทำซ้ำเพื่อการจำหน่ายจ่ายแจก
TISI

© IEC 2023

เอกสารฉบับนี้เป็นสิทธิ์ของ IEC หากมิได้ระบุไว้เป็นอย่างอื่น ห้ามนำเอกสารฉบับนี้หรือส่วนหนึ่งส่วนใดไปทำซ้ำหรือใช้ประโยชน์ในรูปแบบหรือโดยวิธีใด ๆ ไม่ว่าจะเป็นรูปแบบอิเล็กทรอนิกส์หรือทางกล รวมถึงการถ่ายสำเนาและการถ่ายไมโครฟิล์ม โดยไม่ได้รับอนุญาตเป็นลายลักษณ์อักษรจาก IEC หรือจากสมาชิก IEC ในประเทศของผู้ร้องขอ

หากมีคำถามใด ๆ เกี่ยวกับลิขสิทธิ์ของ IEC หรือมีคำถามเกี่ยวกับการขอรับสิทธิเพิ่มเติมในเอกสารฉบับนี้ โปรดติดต่อตามที่อยู่ด้านล่างหรือติดต่อสมาชิก IEC ในประเทศของผู้ร้องขอเพื่อขอข้อมูลเพิ่มเติม

All rights reserved. Unless otherwise specified, no part of this publication may be reproduced or utilized in any form or by any means, electronic or mechanical, including photocopying and microfilm, without permission in writing from either IEC or IEC's member National Committee in the country of the requester.

If you have any questions about IEC copyright or have an enquiry about obtaining additional rights to this publication, please contact the address below or your local IEC member National Committee for further information.

IEC Central Office
3, rue de Varembé
CH-1211 Geneva 20
Switzerland

Tel.: +41 22 919 02 11
info@iec.ch
www.iec.ch

ห้ามทำซ้ำเพื่อการค้า สำนักงานมาตรฐานผลิตภัณฑ์อุตสาหกรรม

ห้ามทำซ้ำเพื่อการค้าหน่ายจ่ายแจก

CONTENTS

FOREWORD 6
1 Scope 9
2 Normative references 9
3 Terms and definitions 11
4 Test categories 11
4.1 General 11
4.2 Environmental stress tests 11
4.3 General inspection tests 12
4.4 Electrical shock hazard tests 12
4.5 Fire hazard tests 12
4.6 Mechanical stress tests 13
5 Classes and their necessary test procedures 13
6 Sampling 15
7 Test report 15
8 Testing 16
9 Pass criteria 18
10 Test procedures 18
10.1 General 18
10.2 Visual inspection MST 01 18
10.2.1 Purpose 18
10.2.2 Procedure 18
10.2.3 Pass criteria 18
10.3 Performance at STC MST 02 20
10.3.1 Purpose 20
10.3.2 Procedure 20
10.3.3 Pass criteria 20
10.4 Maximum power determination MST 03 21
10.4.1 Purpose 21
10.4.2 Procedure 21
10.4.3 Pass criteria 21
10.5 Insulation thickness test MST 04 21
10.5.1 Purpose 21
10.5.2 Procedure 21
10.5.3 Pass criteria 21
10.6 Durability of markings MST 05 22
10.7 Sharp edge test MST 06 22
10.7.1 Purpose 22
10.7.2 Apparatus 22
10.7.3 Procedure 23
10.7.4 Final measurements 24
10.7.5 Pass criteria 24
10.8 Bypass diode functionality test MST 07 24
10.9 Accessibility test MST 11 24
10.9.1 Purpose 24
10.9.2 Apparatus 24
10.9.3 Procedure 24

10.9.4 Final measurements 25
10.9.5 Pass criteria 25
10.10 Cut susceptibility test MST 12 25
10.10.1 Purpose 25
10.10.2 Apparatus 25
10.10.3 Procedure 25
10.10.4 Final measurements 26
10.10.5 Pass criteria 26
10.11 Continuity test of equipotential bonding MST 13 27
10.11.1 Purpose 27
10.11.2 Apparatus 27
10.11.3 Procedure 27
10.11.4 Final measurements 27
10.11.5 Pass criteria 27
10.12 Impulse voltage test MST 14 27
10.12.1 Purpose 27
10.12.2 Apparatus 28
10.12.3 Procedure 28
10.12.4 Final measurement 29
10.12.5 Pass criteria 29
10.13 Insulation test MST 16 29
10.14 Wet leakage current test MST 17 29
10.15 Placeholder section, formerly Temperature test MST 21 29
10.16 Hot-spot endurance test MST 22 29
10.17 Fire test MST 23 30
10.18 Ignitability test MST 24 30
10.18.1 Purpose 30
10.18.2 Apparatus 30
10.18.3 Test specimen 31
10.18.4 Conditioning 31
10.18.5 Procedure 31
10.18.6 Duration of test 34
10.18.7 Expresssion of results 34
10.18.8 Pass criteria 34
10.19 Bypass diode thermal test MST 25 34
10.20 Reverse current overload test MST 26 34
10.20.1 Purpose 34
10.20.2 Apparatus 34
10.20.3 Procedure 35
10.20.4 Pass criteria 35
10.21 Module breakage test MST 32 36
10.21.1 Purpose 36
10.21.2 Apparatus 36
10.21.3 Procedure 36
10.21.4 Pass criteria 36
10.22 Screw connections test MST 33 39
10.22.1 Test for general screw connections MST 33a 39
10.22.2 Test for locking screws MST 33b 41
10.23 Static mechanical load test MST 34 41

10.23.1 General 41
10.23.2 Pass criteria 41
10.24 Peel test MST 35 41
10.24.1 Purpose 41
10.24.2 Sample requirements 41
10.24.3 Apparatus 42
10.24.4 Procedure 42
10.24.5 Pass criteria 45
10.25 Lap shear strength test MST 36 45
10.25.1 Purpose 45
10.25.2 Test samples 45
10.25.3 Apparatus 46
10.25.4 Procedure 46
10.25.5 Pass criteria 47
10.26 Materials creep test MST 37 48
10.26.1 Purpose 48
10.26.2 Apparatus 48
10.26.3 Procedure 48
10.26.4 Final measurements 48
10.26.5 Pass criteria 48
10.27 Robustness of terminations test MST 42 48
10.28 Thermal cycling test MST 51 49
10.29 Humidity freeze test MST 52 49
10.30 Damp heat test MST 53 49
10.31 UV test MST 54 49
10.32 Cold conditioning test MST 55 49
10.32.1 Purpose 49
10.32.2 Apparatus 49
10.32.3 Procedure 50
10.32.4 Pass criteria 50
10.33 Dry heat conditioning test MST 56 50
10.33.1 Purpose 50
10.33.2 Apparatus 50
10.33.3 Procedure 50
10.33.4 Pass criteria 50
10.34 Evaluation of insulation coordination MST 57 50
10.34.1 Purpose 50
10.34.2 Apparatus 51
10.34.3 Procedure 51
10.34.4 Pass criteria 54
Annex A (informative) Recommendations for testing of PV modules from production 55
A.1 General 55
A.2 Module output power 55
A.3 Wet insulation test 55
A.4 Visual inspection 56
A.5 Bypass diodes 56
A.6 Continuity test of equipotential bonding 56
Annex B (informative) Fire tests, spread-of-flame and burning-brand tests for PV modules 57

B.1 General 57
B.2 Fire test for PV modules based on ENV 1187 57
B.2.1 General 57
B.2.2 External fire exposure to roofs 57
B.2.3 Classification according to EN 13501-5 59
B.3 Fire test for PV modules based on ANSI/UL 61730-2 59
Annex C (normative) Usage of representative samples for very large modules 60
Bibliography 63

Figure 1 – Test sequences – Pass criteria 17
Figure 2 – Assessment of bubbles for evaluation of clearances and creepage distances, or distance through insulation 20
Figure 3 – Test apparatus MST 06 23
Figure 4 – Position of test apparatus 24
Figure 5 – Cut susceptibility test 26
Figure 6 – Waveform of the impulse voltage following IEC 60060-1 28
Figure 7 – Application of burner for multilayer products 33
Figure 8 – Impactor 37
Figure 9 – Impact test frame 1 38
Figure 10 – Impact test frame 2 39
Figure 11 – Sample preparation of cemented joints ≤ 10 mm using a release sheet 42
Figure 12 – PV module with positions for peel samples on frontsheet or backsheet 43
Figure 13 – Typical peel-off measurement curves 44
Figure 14 – Lap shear test sample for proving cemented joint 46
Figure 15 – Lap-shear test flow 47
Figure B.1 – Example of test set-up for fire test 58
Figure C.1 – Example for a possible break 62

Table 1 – Environmental stress tests 11
Table 2 – General inspection tests 12
Table 3 – Electrical shock hazard tests 12
Table 4 – Fire hazard tests 13
Table 5 – Mechanical stress tests 13
Table 6 – Required tests, depending on the Class 14
Table 7 – Tapes for test finger 23
Table 8 – Torque tests on screws per IEC 60598-1:2014, Table 4.1 40
Table 9 – Altitude correction factor for test voltage for operating (installation) altitudes higher than 2 000 m 52
Table 10 – Altitude correction factor for test voltage for testing (laboratory) altitudes lower than 2 000 m 52
Table 11 – Rated impulse voltages 53
Table C.1 – Overview of tests 61

INTERNATIONAL ELECTROTECHNICAL COMMISSION

_____

PHOTOVOLTAIC (PV) MODULE SAFETY QUALIFICATION –

Part 2: Requirements for testing

FOREWORD

1) The International Electrotechnical Commission (IEC) is a worldwide organization for standardization comprising all national electrotechnical committees (IEC National Committees). The object of IEC is to promote international co-operation on all questions concerning standardization in the electrical and electronic fields. To this end and in addition to other activities, IEC publishes International Standards, Technical Specifications, Technical Reports, Publicly Available Specifications (PAS) and Guides (hereafter referred to as “IEC Publication(s)”). Their preparation is entrusted to technical committees; any IEC National Committee interested in the subject dealt with may participate in this preparatory work. International, governmental and non-governmental organizations liaising with the IEC also participate in this preparation. IEC collaborates closely with the International Organization for Standardization (ISO) in accordance with conditions determined by agreement between the two organizations.
2) The formal decisions or agreements of IEC on technical matters express, as nearly as possible, an international consensus of opinion on the relevant subjects since each technical committee has representation from all interested IEC National Committees.
3) IEC Publications have the form of recommendations for international use and are accepted by IEC National Committees in that sense. While all reasonable efforts are made to ensure that the technical content of IEC Publications is accurate, IEC cannot be held responsible for the way in which they are used or for any misinterpretation by any end user.
4) In order to promote international uniformity, IEC National Committees undertake to apply IEC Publications transparently to the maximum extent possible in their national and regional publications. Any divergence between any IEC Publication and the corresponding national or regional publication shall be clearly indicated in the latter.
5) IEC itself does not provide any attestation of conformity. Independent certification bodies provide conformity assessment services and, in some areas, access to IEC marks of conformity. IEC is not responsible for any services carried out by independent certification bodies.
6) All users should ensure that they have the latest edition of this publication.
7) No liability shall attach to IEC or its directors, employees, servants or agents including individual experts and members of its technical committees and IEC National Committees for any personal injury, property damage or other damage of any nature whatsoever, whether direct or indirect, or for costs (including legal fees) and expenses arising out of the publication, use of, or reliance upon, this IEC Publication or any other IEC Publications.
8) Attention is drawn to the Normative references cited in this publication. Use of the referenced publications is indispensable for the correct application of this publication.
9) Attention is drawn to the possibility that some of the elements of this IEC Publication may be the subject of patent rights. IEC shall not be held responsible for identifying any or all such patent rights.

IEC 61730-2 has been prepared by IEC technical committee 82: Solar photovoltaic energy systems. It is an International Standard.

This third edition cancels and replaces the second edition published in 2016. This edition constitutes a technical revision.

This edition includes the following significant technical changes with respect to the previous edition:

a) MST 06: Sharp edge test revised.
b) MST 14: Impulse voltage test contains technical corrections to Figure 4.

c) MST 21: Temperature test has been removed from this standard because modules tested individually in unrestricted mounting systems in open-air climates below 40 °C operate at or below a 98th-percentile operating temperature of 70 °C. As a result, the existing IEC 61730-1 requirement for a minimum RTI/RTE/TI of 90 °C is adequate. To address modules operating at higher temperatures, IEC TS 63126 includes an informative annex to describe tests and analysis techniques suitable for estimating the 98th-percentile operating temperature. This covers system effects such as mounting methods that restrict airflow and result in a 98th-percentile module operating temperature in excess of 70 °C.

d) MST 24: Ignitability test revised.

e) MST 26: Reverse current overload test revised.

f) MST 32: Module breakage test is no longer required for Class 0 modules.

g) MST 54: Instead of sequential test with one module now one module for sequence B shall be irradiated from the front side and another module from the backside during the 60 kWh/m^2 cycle.

h) MST 57: Evaluation of insulation coordination added.

i) All MQT references updated to revised IEC 61215 series Ed.2.0 2021.

j) Bifacial modules: Requirements updated for MST 02 Performance at STC, MST 07 Bypass diode functionality test, MST 22 Hot-spot endurance test, MST 25 Bypass diode thermal test and MST 51 Thermal cycling (TC200).

k) Term “Very large module” defined and Annex C (normative) “Usage of representative samples for very large modules” added.

The text of this International Standard is based on the following documents:

Draft	Report on voting
82/2122/FDIS	82/2166/RVD

Full information on the voting for its approval can be found in the report on voting indicated in the above table.

The language used for the development of this International Standard is English.

This document was drafted in accordance with ISO/IEC Directives, Part 2, and developed in accordance with ISO/IEC Directives, Part 1 and ISO/IEC Directives, IEC Supplement, available at www.iec.ch/members_experts/refdocs. The main document types developed by IEC are described in greater detail at www.iec.ch/publications.

A list of all parts in the IEC 61730 series, published under the general title *Photovoltaic (PV) module safety qualification*, can be found on the IEC website.

The committee has decided that the contents of this document will remain unchanged until the stability date indicated on the IEC website under webstore.iec.ch in the data related to the specific document. At this date, the document will be

- reconfirmed,
- withdrawn,
- replaced by a revised edition, or
- amended.

IMPORTANT – The "colour inside" logo on the cover page of this document indicates that it contains colours which are considered to be useful for the correct understanding of its contents. Users should therefore print this document using a colour printer.

ห้ามทำซ้ำเพื่อการค้าหน่วยงานลิขสิทธิ์

PHOTOVOLTAIC (PV) MODULE SAFETY QUALIFICATION –

Part 2: Requirements for testing

1 Scope

The scope of IEC 61730-1 is also applicable to this part of IEC 61730. While IEC 61730-1 outlines the requirements of construction, this document lists the tests a PV module is required to fulfill for safety qualification. This document applies for safety qualification only in conjunction with IEC 61730-1.

The sequence of tests required in this document may not test for all possible safety aspects associated with the use of PV modules in all possible applications. This document utilizes the best sequence of tests available at the time of its writing.

The objective of this document is to provide the testing sequence intended to verify the safety of PV modules whose construction has been assessed by IEC 61730-1. The test sequence and pass criteria are designed to detect the potential breakdown of internal and external components of PV modules that would result in fire, electric shock, and/or personal injury. This document defines the basic safety test requirements and additional tests that are a function of the PV module end-use applications. Test categories include general inspection, electrical shock hazard, fire hazard, mechanical stress, and environmental stress.

The additional testing requirements outlined in relevant ISO documents, or the national or local codes which govern the installation and use of these PV modules in their intended locations, are considered in addition to the requirements contained within this document.

2 Normative references

The following documents are referred to in the text in such a way that some or all of their content constitutes requirements of this document. For dated references, only the edition cited applies. For undated references, the latest edition of the referenced document (including any amendments) applies.

IEC 60060-1, *High-voltage test techniques – Part 1: General definitions and test requirements*

IEC 60068-2-1:2007, *Environmental testing – Part 2-1: Tests – Test A: Cold*

IEC 60068-2-2:2007, *Environmental testing – Part 2-2: Tests – Test B: Dry heat*

IEC 60068-3-5, *Environmental testing – Part 3-5: Supporting documentation and guidance – Confirmation of the performance of temperature chambers*

IEC 60598-1:2020, *Luminaires – Part 1: General requirements and tests*

IEC 60664-1:2020, *Insulation co-ordination for equipment within low-voltage systems – Part 1: Principles, requirements and tests*

IEC 60695-2-10, *Fire hazard testing – Part 2-10: Glowing/hot-wire based test methods – Glow-wire apparatus and common test procedure*

IEC 60950-1:2005, *Information technology equipment – Safety – Part 1: General requirements*
IEC 60950-1:2005/AMD1:2009
IEC 60950-1:2005/AMD2:2013

IEC 61010-1, *Safety requirements for electrical equipment for measurement, control and laboratory use – Part 1: General requirements*

IEC 61032:1997*, Protection of persons and equipment by enclosures – Probes for verification*

IEC 61140, *Protection against electric shock – Common aspects for installation and equipment*

IEC 61215 (all parts), *Terrestrial photovoltaic (PV) modules – Design qualification and type approval*

IEC 61215-2, *Terrestrial photovoltaic (PV) modules – Design qualification and type approval – Part 2: Test procedures*

IEC 61730-1:2023, *Photovoltaic (PV) module safety qualification – Part 1: Requirements for construction*

IEC TS 61836, *Solar photovoltaic energy systems – Terms, definitions and symbols*

IEC 62788-2-1:2023, *Measurement procedures for materials used in photovoltaic modules – Part 2-1: Polymeric materials – Frontsheet and backsheet – Safety requirements*

IEC 62790:2020, *Junction boxes for photovoltaic modules – Safety requirements and tests*

IEC TS 62915, *Photovoltaic (PV) modules – Type approval, design and safety qualification – Retesting*

ISO 813, *Rubber, vulcanized or thermoplastic – Determination of adhesion to a rigid substrate – 90 degree peel method*

ISO 4587:2003, *Adhesives – Determination of tensile lap-shear strength of rigid-to-rigid bonded assemblies*

ISO 5893, *Rubber and plastics test equipment – Tensile, flexural and compression types (constant rate of traverse) – Specification*

ISO 11925-2:2020, *Reaction to fire tests – Ignitability of products subjected to direct impingement of flame – Part 2: Single-flame source test*

ISO 23529, *Rubber – General procedures for preparing and conditioning test pieces for physical test methods*

ANSI/UL 1703:2015, *Flat-plate photovoltaic modules and panels*

ANSI Z97.1:2009, *Standard – Safety Glazing Materials Used in Buildings – Safety Performance Specifications and Methods of Test*

3 Terms and definitions

For the purposes of this document, the terms and definitions in IEC 61730-1 and IEC TS 61836, as well as the following apply.

ISO and IEC maintain terminological databases for use in standardization at the following addresses:

- IEC Electropedia: available at http://www.electropedia.org/
- ISO Online browsing platform: available at http://www.iso.org/obp

3.1
representative sample
sample that includes all the components of the module, except some repeated parts

3.2
very large module
module that exceeds 2,2 m in any dimension or exceeds 1,5 m in both dimensions

EXAMPLE: a 2,3 m × 0,3 m module is considered very large, as is a 1,6 m × 1,6 m module.

4 Test categories

4.1 General

The hazards described in the following subclause might influence the safety of PV modules. In accordance with these hazards, test procedures and criteria are described. The specific tests to which a PV module will be subjected will depend on the end-use application for which the minimum tests are specified in Clause 5.

NOTE PV module safety tests are labelled MST.

Table 1 through Table 5 show the origin of the required tests. For some tests the third column lists the origin of the tests for information only; the appropriate test requirements are given in 10.1 through 10.34. The other tests are based on or are identical to the MQT tests defined in the IEC 61215 series. References to the relevant tests are given in the last column. Some of the IEC 61215-based tests were modified for IEC 61730-2 and are included in 10.1 through 10.34.

4.2 Environmental stress tests

Table 1 – Environmental stress tests

Test	Title	Referenced standards	Based on
			IEC 61215-2
MST 51	Thermal cycling (TC50 or TC200)	–	**MQT 11**
MST 52	Humidity freeze (HF10)	–	**MQT 12**
MST 53	Damp heat (DH200 or DH1000)	–	**MQT 13**
MST 54	UV preconditioning	–	**MQT 10**
MST 55	Cold conditioning	IEC 60068-2-1	–
MST 56	Dry heat conditioning	IEC 60068-2-2	–

4.3 General inspection tests

Table 2 – General inspection tests

Test	Title	Referenced standards	Based on
			IEC 61215-2
MST 01	Visual inspection	–	**MQT 01**
MST 02	Performance at STC	–	**MQT 6.1**
MST 03	Maximum power determination	–	**MQT 02**
MST 04	Insulation thickness	–	–
MST 05	Durability of markings	IEC 60950-1	–
MST 06	Sharp edge test	–	–
MST 07	Bypass diode functionality test	–	–
MST 57	Evaluation of insulation coordination	IEC 60664-1	–

4.4 Electrical shock hazard tests

These tests are designed to assess the risk to persons due to shock or injury from contact with parts of a PV module that are electrically energised as a result of design, construction, or faults caused by environment or operation.

Table 3 – Electrical shock hazard tests

Test	Title	Referenced standards	Based on
			IEC 61215-2
MST 11	Accessibility test	IEC 61032	–
MST 12	Cut susceptibility test	ANSI/UL 1703:2015	–
MST 13	Continuity test for equipotential bonding	ANSI/UL 1703:2015	–
MST 14	Impulse voltage test	IEC 60060-1	–
MST 16	Insulation test	–	**MQT 03**
MST 17	Wet leakage current test	–	**MQT 15**
MST 42	Robustness of terminations test	IEC 62790	**MQT 14**
MST 57	Evaluation of insulation coordination	IEC 60664-1	**-**

4.5 Fire hazard tests

These tests assess the potential fire hazard due to the operation of a PV module or failure of its components.

Table 4 – Fire hazard tests

Test	Title	Referenced standards	Based on
			IEC 61215-2
MST 22	Hot-spot endurance test	–	**MQT 09**
MST 23[a]	Fire test	–	National/Local code
MST 24	Ignitability test	ISO 11925-2:2020	–
MST 25	Bypass diode thermal test	–	**MQT 18**
MST 26	Reverse current overload test	–	–

[a] Fire tests are locally regulated and typically only required for building integrated or building added products, typically to verify their ability to resist fire from external sources.

4.6 Mechanical stress tests

These tests are to minimise potential injury due to mechanical failure.

Table 5 – Mechanical stress tests

Test	Title	Referenced standards	Based on
			IEC 61215-2
MST 32	Module breakage test	ANSI Z97.1	–
MST 33	Screw connection test	IEC 60598-1	–
MST 34	Static mechanical load test	–	**MQT 16**
MST 35	Peel test	ISO 5893	–
MST 36	Lap shear strength test	ISO 4587:2003	–
MST 37	Materials creep test	–	–
MST 42	Robustness of terminations test		**MQT 14**

Recommendations for testing of PV modules from production are given in Annex A.

5 Classes and their necessary test procedures

The specific tests to which a PV module will be subjected, depending on the Class defined in IEC 61730-1 referring to IEC 61140, are described in Table 6. The order in which the tests are carried out shall be in accordance with Figure 1. Some tests shall be carried out as preconditioning tests.

Table 6 – Required tests, depending on the Class

Class according to IEC 61140			Tests
II	0	III	
			Environmental stress tests:
X	X	X	MST 51 Thermal cycling (T50 or T200)
X	X	X	MST 52 Humidity freeze (HF10)
X	X	X	MST 53 Damp heat (DH200 or DH1 000)
X	X	X	MST 54 UV pre-conditioning (15 kWh/m^2 or 60 kWh/m^2)
X[a]	X[a]	X[a]	MST 55 Cold conditioning
X[a]	X[a]	X[a]	MST 56 Dry heat conditioning
			General inspection test:
X	X	X	MST 01 Visual Inspection
X	X	X	MST 02 Performance at STC
X	X	X	MST 03 Maximum power determination
X[c]	X[c]	-	MST 04 Insulation thickness
X	X	X	MST 05 Durability of markings
X	X	X	MST 06 Sharp edge test
X	X	X	MST 57 Evaluation of insulation coordination
			Electrical shock hazard tests:
X	X	-	MST 11 Accessibility test
X[c]	X[c]	-	MST 12 Cut susceptibility test
X	X	-	MST 13 Continuity test for equipotential bonding
X	X	-	MST 14 Impulse voltage test
X	X	X	MST 16 Insulation test
X	X	-	MST 17 Wet leakage current test
X	X	X	MST 42 Robustness of terminations test
X	X	X	MST 57 Evaluation of insulation coordination
			Fire hazard tests:
X	X	X	MST 22 Hot-spot endurance test
X[b]	X[b]	X[b]	MST 23 Fire test
X	X	X	MST 24 Ignitability test
X	X	X	MST 25 Bypass diode thermal test
X	X	-	MST 26 Reverse current overload test
			Mechanical stress tests:
X	-	X	MST 32 Module breakage test
X	X	X	MST 33 Screw connection test
X	X	X	MST 34 Static mechanical load test
X[c,e]	X[c,e]	X[c,e]	MST 35 Peel test
X[d,e]	X[d,e]	X[d,e]	MST 36 Lap shear strength test
X	X	X	MST 37 Materials creep test

X Test required.

- Test does not need to be carried out.

[a] Only required to prove reduction of Pollution Degree PD=2 to PD=1.

[b] Fire tests are nationally regulated and typically only required for building integrated or building added products. Hence, the applicability of a fire test does not depend on the Class, but on the mounting location.

[c] This test is not applicable to rigid-to-rigid bonded assemblies (e.g. glass/glass PV modules).

[d] This test is not applicable to rigid-to-flexible or flexible-to-flexible bonded assemblies.

[e] Only required for proof of cemented joints around the PV module edges.

6 Sampling

A minimum of 10 PV modules and two unframed PV modules are used for safety testing (plus spares as desired). In order to prove reduction of Pollution Degree to PD 1, one additional PV module is required. If tests of Sequence F are performed in parallel, between one and three additional modules are required.

If cemented joints according to MST 35 or MST 36 are to be qualified, one of the following is required:

- Two unframed PV modules are tested in sequence B, one with the front-side facing the light and one with the backside facing the light. The front-side exposed specimen shall be used in the evaluation. One additional unframed PV module is required to test initial adhesion strength if a peel test (MST 35) is used for evaluation.
- For Glass/Glass constructions 20 additional samples according to 10.25.2 are required for the lap shear strength test (MST 36) to prove cemented joints.

All specimens shall be technically identical (same components). For MST 24, and MST 32 PV modules which are complete in every detail, but not functioning or of low power, etc., are acceptable.

All test specimens except for MST 35 and MST 36, should be taken at random from a production batch or batches.

Additional PV modules for MST 23 might be necessary (PV modules which are complete in every detail, but not functioning or of low power, etc., are acceptable).

The PV modules shall have been manufactured from specified materials and components in accordance with the relevant drawings and process sheets and have been subjected to the module manufacturer's normal inspection, quality control and production acceptance procedures. The PV modules shall be complete in every detail and shall be accompanied by the manufacturer's handling, mounting, and connection instructions. When the PV modules to be tested are prototypes of a new design and not from production, this fact shall be noted in the test report (see Clause 7). For sampling in the context of retesting, e.g. multiple bill of material (BOM), please see Clause 8 as well as IEC TS 62915.

The use of representative samples as substitutes for very large modules is described in Annex C.

7 Test report

The results of the assessment against IEC 61730-1 and IEC 61730-2 shall be laid down in one combined or two separate test reports. The results shall be reported, normally in a test report and shall include all the information requested by the client and necessary for the interpretation of the test and all information required by the method used:

a) a title;

b) name and address of the test laboratory and location where the tests were carried out;

c) unique identification of the report and of each page;

d) name and address of client, where appropriate;

e) description and identification of the item tested;

f) characterization and condition of the test item;

g) date of receipt of test item and date(s) of test, where appropriate;

h) identification of test method used;

i) reference to sampling procedure, where relevant;

j) any deviations from, additions to or exclusions from the test method, and any other information relevant to specific tests, such as environmental conditions or test method or procedure;

k) measurements, examinations and derived results supported by tables, graphs, sketches and photographs as appropriate including maximum systems voltage, Class according to IEC 61140, mounting technique and any failures observed;

l) a statement indicating whether the impulse voltage test was performed on PV module or laminate (PV module without a frame);

m) a statement of the estimated uncertainty of the test results (where relevant);

n) a signature and title, or equivalent identification of the person(s) accepting responsibility for the content of the report, and the date of issue;

o) where relevant, a statement to the effect that the results relate only to the items tested;

p) a statement that the report shall not be reproduced except in full, without the written approval of the laboratory.

A copy of this report shall be kept by the manufacturer for reference purposes.

8 Testing

The PV modules shall be divided into groups and subjected to the safety tests shown in Figure 1, carried out in the order specified. The PV modules shall be selected such that the environmental stress tests of 4.2 are met. Each box in Figure 1 refers to the corresponding subclause as described in Clause 4.

Spare PV modules may be included in the safety test program provided that they have been appropriately environmentally tested to meet the necessary prerequisites.

Test procedures and criteria, including initial and final measurements where necessary, are detailed in 10.2 through10.34. Some tests are identical to tests in IEC 61215-2 and are referenced in Clause 4. In carrying out these tests, the manufacturer's handling, mounting, and connection instructions shall be strictly observed.

One PV module for sequence B shall be irradiated from the front side of the specimen and another from the backside during the 60 kWh/m^2 cycle (MST 54).

The intermediate control measurements (MST 01, MST 16, MST 17) after each stress test in Figure 1 are informative and may be skipped. Final measurements are required.

The wait time (48 h to 96 h) at the end of the sequence shall ensure that a minimum time between the immediate control inspection after completion of each environmental test (time counter starts after completion of MST 51, MST 52 and MST 53) and a second visual inspection is maintained. This is due to possible variation in visual defects apparent a few hours versus several days after an environmental stress test. The wait time does not apply to any other control check other than the visual inspection.

The tests in sequence F may be performed on separate modules. The test for MST 25 may be performed on specially prepared samples (e.g. thermocouples within the laminate or junction box). If any of the individual tests of the sequence impacts the outcome of one of the subsequent tests, a separate sample shall be used. Potential impact on module output can be verified by MST 02.

The number of PV modules required for the fire test MST 23 will depend on the relevant test procedure. Retesting, e.g. multiple BOM, shall be performed according to IEC TS 62915. The recommended test sequences have been selected to identify adverse changes to the modified product.

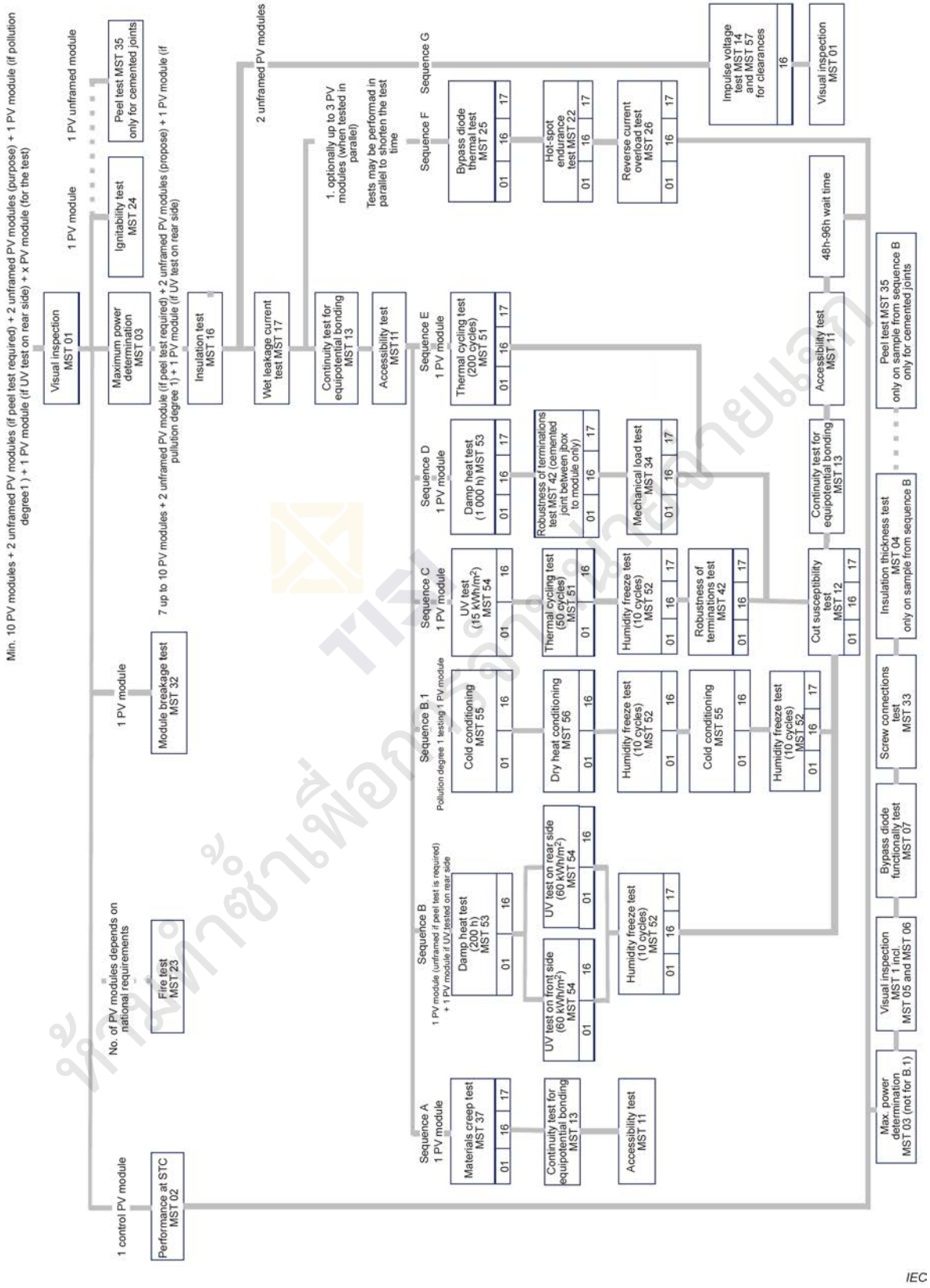

Intermediate tests for MST 01, MST 16 and MST 17 are optional.

For MST 16 after MST 12, preparation-requirements of 10.10.4 apply.

Maximum power determination shall not be performed for Sequence B.1.

Figure 1 – Test sequences – Pass criteria

9 Pass criteria

The product under evaluation shall be judged to have passed the safety qualification test, if the test samples meet all of the criteria of each individual test and no loss of electrical continuity occurs during testing in sequences A through F. The product is deemed not to comply with this document if any sample fails in one or more of the tests.

In case of failure the manufacturer shall prepare a failure analysis and propose corrective actions. Depending on the proposed modification(s), a re-evaluation program can be defined before testing (IEC TS 62915), including design review to IEC 61730-1.

10 Test procedures

10.1 General

If not otherwise specified, all applied forces in N shall have an accuracy of 5 %.

If not otherwise specified, all torques (Nm) shall have an accuracy of 5 %.

10.2 Visual inspection MST 01

10.2.1 Purpose

To detect and document any visual defects and changes in the PV module.

10.2.2 Procedure

This test is identical with MQT 01 of IEC 61215-2 with the additional inspection criteria of

- any other conditions which may affect safety.
- during final inspection check compliance of markings with 5.2 of IEC 61730-1:2022 subsequent to the Durability of markings test (MST 05) as described in 10.6.
- during final inspection check for sharp edges as described in 10.7 (MST 06).
- during final inspection check of minimum distances as defined in Tables 3 and 4 of IEC 61730-1:2022 according to MST 57. See Figure 2a and Figure 2b for examples of creepage distance measurement when bubbles occur. Bubbles are assumed to be conductive for this evaluation. For clearance and creepage assessment check Annex C of IEC 61730-1:2022.

  It is advisable to check distances during the initial inspection to validate that the PV module meets the insulation requirements.
- During final inspection check the joint between junction boxes and modules for signs of creeping.

Make note of and/or photograph the nature and position of any cracks, bubbles or delaminations, etc., which may worsen and adversely affect the PV module safety in subsequent tests. Visual conditions other than the major defects listed below are acceptable for the purpose of safety test approval.

10.2.3 Pass criteria

For the purpose of this safety test, the following are considered to be major visual defects:

a) broken, cracked, or torn external surfaces;

b) bent or misaligned external surfaces, including frontsheet, backsheet, frames and junction boxes to the extent that the safety of the PV module would be impaired;

c) in cemented joints bubbles, foreign material or delaminations with closest distances to each other ≤ 2 times the minimum required distance through cemented joint (see Tables 3 and 4 of IEC 61730-1:2022) shall be evaluated as conductive and electrically connected. The shortest distance from and to such bubbles or delaminations through insulation material shall in sum not be shorter than the required minimum distance through cemented joint. See Figure 2b for example;

d) for adhesive bonds other than in c) bubbles or delaminations with closest distances to each other ≤ 2 times the minimum required creepage distance (see Tables 3 and 4 of IEC 61730-1:2022) shall be evaluated as conductive and electrically connected. The shortest distance from and to such bubbles or delaminations through insulation material shall in sum not be shorter than the required minimum creepage distance. See Figure 2b for example;

e) loss of mechanical integrity to the extent that the safety of the installation and safe operation of the PV module would be impaired;

f) if the mechanical integrity depends on lamination or other means of adhesion, the sum of the area of all bubbles shall not exceed 1 % of the total PV module area;

g) evidence of any molten or burned component;

h) markings not complying with 5.2 of IEC 61730-1:2022 and the durability of markings test (MST 05) at final inspection;

i) edges not complying with MST 06 sharp edge test at final inspection;

j) The final inspection of a joint between junction box and module shall show no sign of creeping.

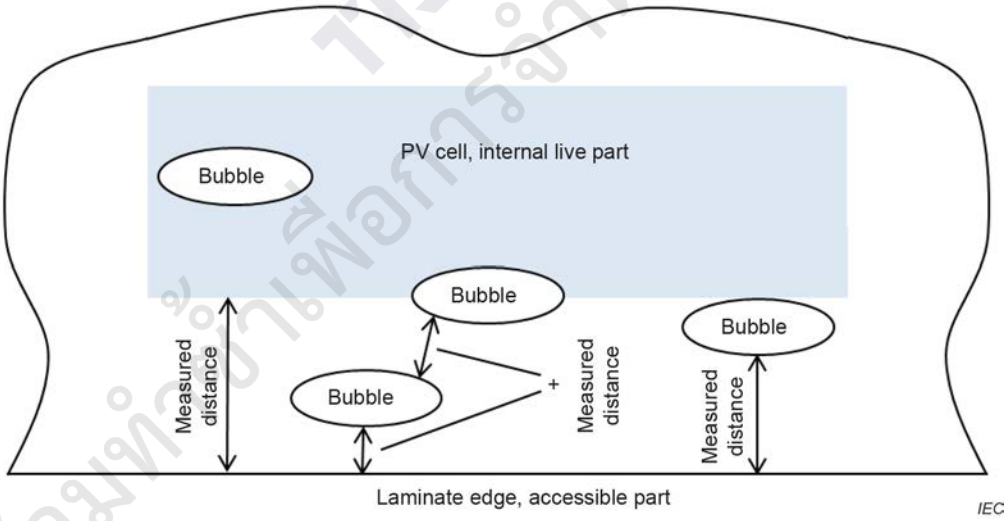

a) Example for delamination assessment when measuring creepage distances and clearances, or distance through insulation

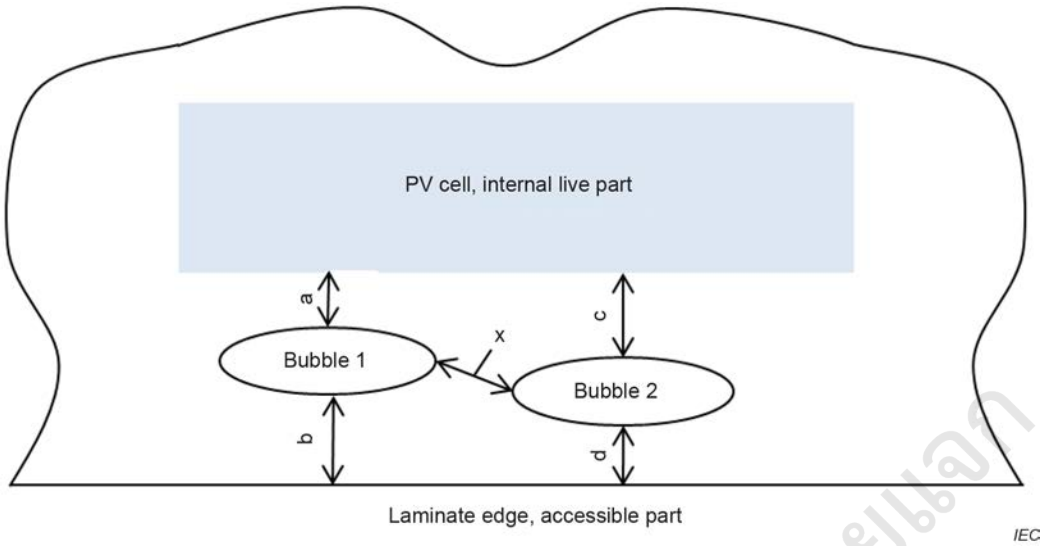

b) Example for delamination distance (x) assessment when measuring creepage distances and clearances, or distance through insulation

Figure 2 – Assessment of bubbles for evaluation of clearances and creepage distances, or distance through insulation

EXAMPLE 1 Cemented joint:

If distance x between bubbles is ≤ 2 times the minimum distance through cemented joint then the shortest path through insulation would be measured by adding distances a and d. If distance x between bubbles is > 2 times the minimum distance through cemented joint then the shortest path through insulation would be measured by adding distances a and b and respectively by adding distances c and d. The shorter of the two sums needs to comply with the requirements set forth in IEC 61730-1.

EXAMPLE 2 Creepage distance:

If distance x between bubbles is ≤ 2 times the minimum creepage distance then the shortest path along an interface (creepage distance) through the insulation system would be measured by adding distances a and d. If distance x between bubbles is > 2 times the minimum creepage distance then the shortest path along an interface (creepage distance) through the insulation system would be measured by adding distances a and b and respectively by adding distances c and d. The shorter of the two sums needs to comply with the requirements set forth in IEC 61730-1.

10.3 Performance at STC MST 02

10.3.1 Purpose

This test shall verify the rated short-circuit current (I_{sc}) and open-circuit voltage (V_{oc}) for monofacial modules, and additional I-V characterizations of bifacial modules as described in 10.3.2.

10.3.2 Procedure

The module shall be stabilized according to MQT 19.1 of IEC 61215-2. The test procedure is equivalent to MQT 06.1 in IEC 61215-2.

10.3.3 Pass criteria

Measured I_{sc} and V_{oc} shall be within the tolerances given by the manufacturer.

10.4 Maximum power determination MST 03

10.4.1 Purpose

This test shall verify that the PV module shows the electrical characteristics of a fully functional photovoltaic device.

10.4.2 Procedure

This test is equivalent to MQT 02 in IEC 61215-2.

10.4.3 Pass criteria

The IV curve shall not show any additional kinks or other unusual characteristics as compared to the initial IV curve taken according to MST 02 (e.g. caused by diodes “turning on").

NOTE Especially inhomogeneous degradations within PV modules are causes for safety risks and failures. Degradations of single cells or substrings can lead to hot-spots, high module temperatures or diodes conducting permanently. MST 03 aims at detecting such cases.

10.5 Insulation thickness test MST 04

10.5.1 Purpose

This test shall verify compliance to results of DTI-test of IEC 62788-2-1 which determines the minimum insulation thickness for thin layers. The measured values may be lower than specified in IEC 62788-2-1, but shall not be lower than specified in Table 3 or Table 4 of IEC 61730-1:2022 depending on the PV module’s Class according to IEC 61140.

The test is to be performed on polymeric insulation sheets front side and/or back side.

This test is not applicable to glass layers.

10.5.2 Procedure

The procedure is as follows:

a) Select three locations per side on the PV module representing minimum thickness of the polymeric insulation material.

NOTE 1 Typically minimum thickness can be found at solder connections, edges of frameless PV modules, or laminator membrane indents.

b) Applying a suitable method, measure the thickness of the individual layers separating the electric circuitry from the outer surface. The used method shall have a measurement uncertainty not greater than ±10 % including reproducibility. Then determine the thickness of the part of the layers representing the relied upon insulation (see IEC 62788-2-1:2022).

NOTE 2 Suitable methods can be destructive or non-destructive, e.g. cross-sectional cut and optical measurement; ultra-sonic measurements, etc.

10.5.3 Pass criteria

The measured insulation thickness shall be greater than the requirements listed in either Table 3 or Table 4 of IEC 61730-1:2022 depending on the PV module’s Class according to IEC 61140 and considering the measurement uncertainty of the test and the set-up.

The layer thicknesses in Table 3 and Table 4 of IEC 61730-1:2022 are minimum requirements, therefore the uncertainty of the measurement shall be deducted from the measured value.

EXAMPLE For a system voltage of 1 000 V and a PV module design according to Class II the remaining thickness of the relied upon insulation shall be 150 µm. If the measurement uncertainty of the test and of the set-up is ± 10 %, the measured value shall be equal to or greater than 165 µm.

10.6 Durability of markings MST 05

Any marking required by this standard shall be durable and legible. In considering the durability of the marking, the effect of normal use shall be taken into account.

Compliance is checked by inspection, by measurement and by rubbing the marking by hand using medium pressure for 15 s with a piece of cloth soaked with water and again for 15 s with a piece of cloth soaked with petroleum spirits. After this test, the marking shall be legible; it shall not be possible to remove marking plates easily and they shall show no curling.

The petroleum spirits to be used for the test is aliphatic solvent hexane having a maximum aromatics content of 0,1 % by volume, a kauri-butenol value of 29, an initial boiling point of approximately 65 °C, a dry point of approximately 69 °C and a mass per unit volume of approximately 0,7 kg/l.

NOTE Test is identical to IEC 60335-1:2020, 7.14 and IEC 60950-1:2013, 1.7.11.

10.7 Sharp edge test MST 06

10.7.1 Purpose

All accessible PV module surfaces shall be smooth and free from sharp edges, burrs, etc., which may damage the insulation of conductors or pose a risk of injury during intended use, handling or maintenance.

10.7.2 Apparatus

The apparatus is as follows:

The apparatus should be moveable along the edge to be tested, while executing a steady force of 6,672 (± 0,133) N to the centre of a piece of round steel cylinder (curved side), with an outside diameter of 12,7 mm, as depicted in Figure 3. The round steel cylinder is the tester head.

The piece of round steel is to be wrapped with three layers of tape, the two outer layers act as sensing tapes; the inner layer acts as an indicating tape, or the tapes are to be applied to a 15,9 mm removable sleeve that is placed onto the 12,7 mm steel head, as depicted in Figure 3.

Indicating tape (inner layer) – 19,1 (± 0,2) mm wide, adhesive backed, single-adhesive coated, vinyl foam tape, black in colour, having the tape properties given in Table 7.

Sensing tape No. 2 (middle layer) – 19,1 (± 0,2) mm wide, double-adhesive coated, vinyl foam tape, white in colour, having the tape properties given in Table 7.

Sensing tape No. 1 (outer layer) – 19,1 (± 0,2) mm wide, single-adhesive coated skived tetrafluorethylene tape – natural colour, having the tape properties given in Table 7.

Each tape is to be applied over approximately 180 degrees of the circumference of the test head to prevent stretching of the tape. The tapes are not to be stretched when positioned on the head.

NOTE 1 A UL 1439 compliant test tool is sufficient to meet this requirement and is available commercially.

NOTE 2 The test equipment is similar to that described in IEC TR 62854.

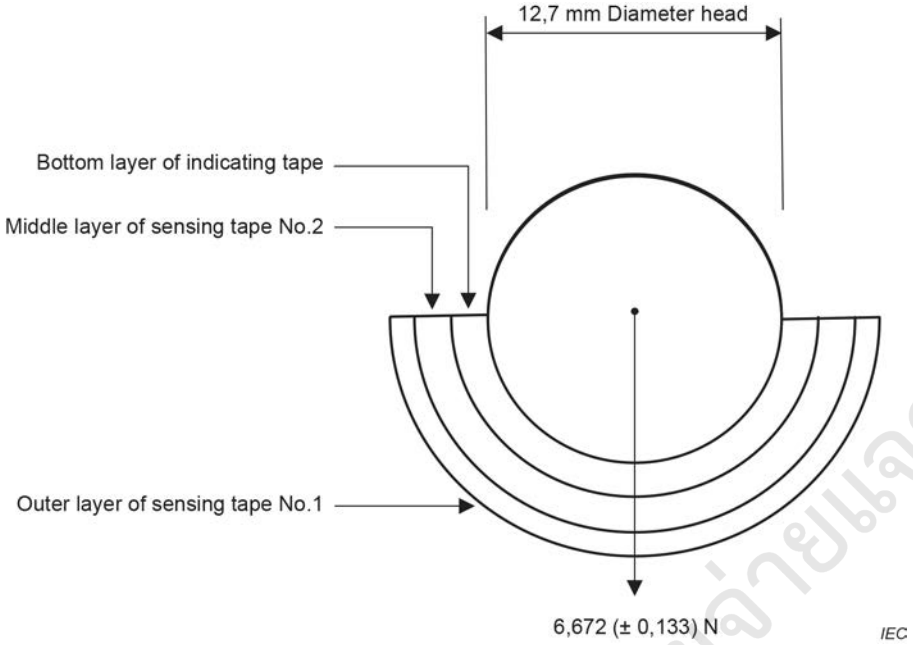

Figure 3 – Test apparatus MST 06

Table 7 – Tapes for test finger

	Indicating tape black vinyl foam tape	**Tape No.2** white vinyl foam tape	**Tape No.1** polytetrafluorethylene tape
Thickness [mm]	1,14 to 2,03	0,64 to 1,02	Total with adhesive backing: 0,114 Backing only: 0,064 to 0,089
Density [kg/m^3]	400 to 433	224 to 321	-

10.7.3 Procedure

The procedure is as follows.

For the purposes of reproducibility this test is conducted under the conditions of module and room temperature each of 23 °C ± 5 °C and relative humidity of less than 75 %.

Compliance of sharp edges shall be checked by initial inspection (four (five) samples total each from sequences B (B1 if PD1), C, D, E of Figure 1).

The curved face of the tester head shall be covered with three layers of tape in the order described in 10.7.2.

The centre of the tape-covered head of the sharp-edge tester shall be positioned on the edge to be tested in the manner illustrated in Figure 4.

The tape-covered head exerts a constant force of 6,672 (± 0,133) N on the edge to be tested.

With contact to the edge, the tester shall immediately be moved along the edge and then back to its starting position without removal of the tester from the edge. The total distance should not exceed 100 mm. The time of travel is not to take longer than 5 s nor less than 2 s. It shall then be withdrawn from the edge.

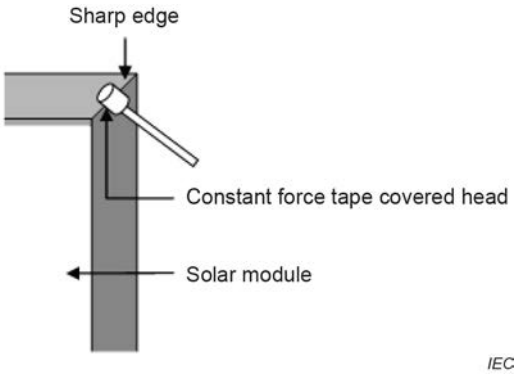

Figure 4 – Position of test apparatus

The tape-covered head shall be then examined to determine whether or not penetration has occurred through the two sensing layers. If penetration has occurred through the two sensing layers, the black indicating tape will be visible through the resulting cut.

Each edge tested shall be identified by description of its location.

10.7.4 Final measurements

None.

10.7.5 Pass criteria

The pass criteria are as follows.

The application of the sharp-edge tester to an accessible edge as described in 10.7.3 shall not result in the cutting through of the two outer layers of the sensing tapes so that the black indicating tape will be visible through the resulting cut.

10.8 Bypass diode functionality test MST 07

The test procedure and pass criteria are equivalent to MQT 18.2 in IEC 61215-2. For bifacial modules tested according to Method A the value for short circuit current shall be $I_{\text{sc-aBSI}}$.

10.9 Accessibility test MST 11

10.9.1 Purpose

To determine if PV modules are constructed to provide adequate protection against accessibility to hazardous live parts (> 35 V).

10.9.2 Apparatus

The apparatus is as follows:

a) A cylindrical test fixture Type 11 according to Figure 7 of IEC 61032:1997.

b) An ohmmeter or continuity tester.

10.9.3 Procedure

The procedure is as follows:

a) Mount and wire the test PV module as recommended by the manufacturer.

b) Attach the ohmmeter or continuity tester to the PV module’s short-circuited terminals and to the test fixture.

c) Remove all covers, plugs and connections from the PV module that can be removed without using a tool.

d) Probe with the test fixture in and around all electrical connectors, junction boxes and any other areas where live parts of the PV module may be accessible.

e) The test fixture shall be used with an applied force of 10 N.

f) Monitor the ohmmeter or continuity tester during the probing to determine if the test fixture makes electrical contact to the PV module live parts.

10.9.4 Final measurements

None.

10.9.5 Pass criteria

The pass criteria are as follows:

a) At no time during the test there shall be a resistance of less than 1 MΩ between the test fixture and the PV module live parts.

b) At no time during the test shall the probe contact any live electrical part.

This test is performed at the beginning and the end of the sequence according to Figure 1, but also can be used at any time during the test sequence if there is any reason to believe that active electric circuitry has been exposed by one of the other tests.

10.10 Cut susceptibility test MST 12

10.10.1 Purpose

To determine whether any front and rear surfaces of the PV module made of polymeric materials are capable of withstanding routine handling during installation and maintenance without exposing personnel to the danger of electric shock.

This test is not applicable to rigid-to-rigid bonded assemblies (e.g. glass/glass PV modules).

10.10.2 Apparatus

A test fixture as shown in Figure 5, designed to draw a defined shaped object over the surface of the PV module with an applied force of 8,9 N ± 0,5 N. The defined shaped object shall be a 0,64 mm ± 0,05 mm thick hardened steel blade sufficiently rigid as not to bend sideways during the test. The tip shall have a top angle of 90° ± 2° and shall be rounded with a radius of 0,115 mm ± 0,025 mm.

Apparatus in Figure 5 is an example and other apparatus proving same test parameters (e.g. force and scratch shape) can also be used if equivalency is verified.

10.10.3 Procedure

The procedure is as follows:

a) Position the PV module horizontally with the test surface facing upward.

b) The test fixture is to be placed on the surface for 1 min and then drawn across the surface of the PV module at a speed of 150 mm/s ± 30 mm/s. Repeat the procedure five times in different directions considering the most critical points.

c) Repeat a) and b) for other polymeric surfaces of the PV module if applicable.

10.10.4 Final measurements

Repeat MST 01, MST 16 and MST 17. For MST 16, conductive foil meeting the requirements described in IEC 61215-2 MQT 03 shall be placed over all areas that were subjected to the cutting stress, and the foil shall extend at least 1 cm past all cut areas.

10.10.5 Pass criteria

The pass criteria are as follows:

a) No visual evidence that the frontsheet or backsheet surfaces have been cut exposing the active circuitry of the PV module.

b) MST 16, MST 17 shall meet the same requirements as for the initial measurements.

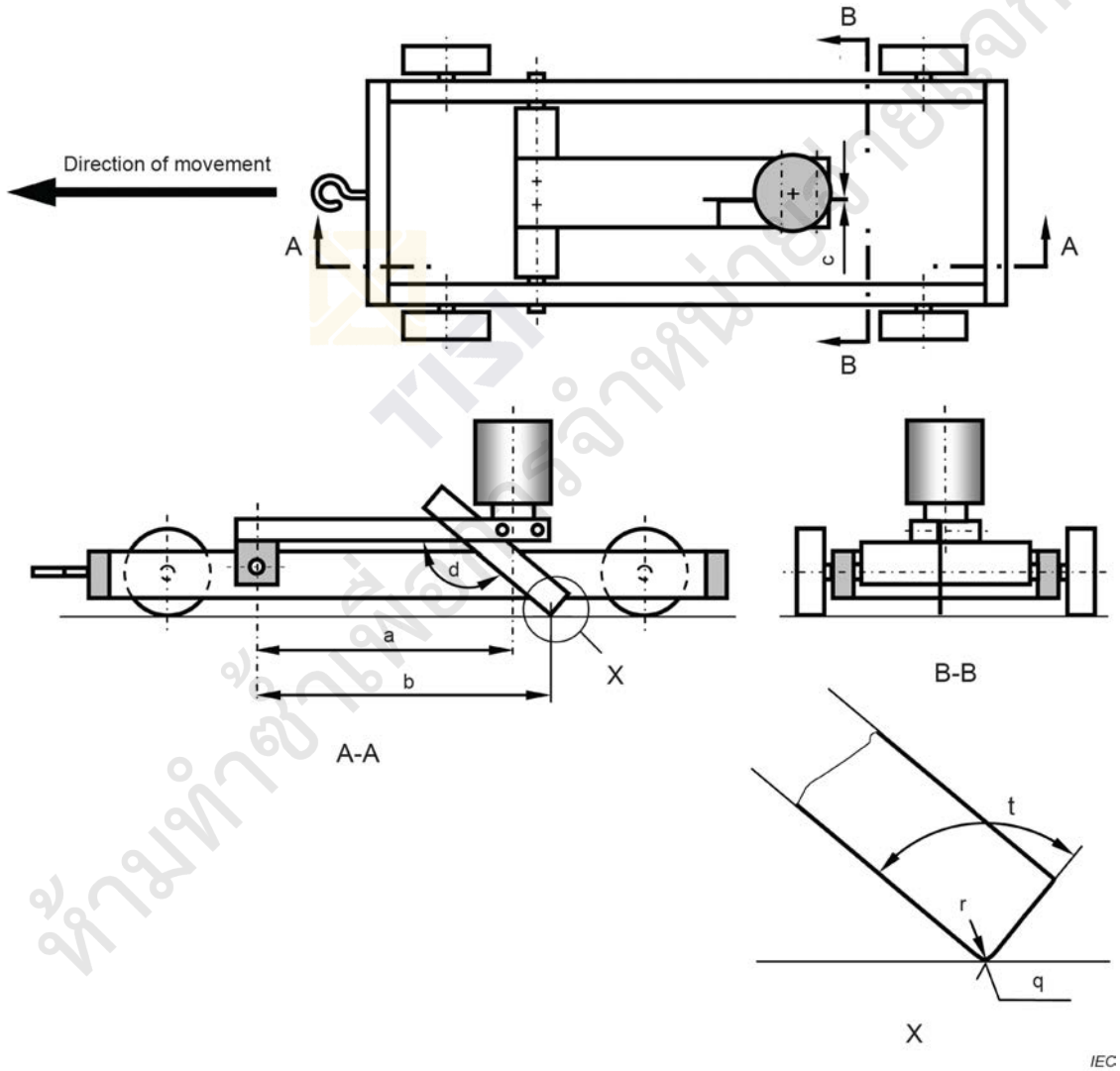

Key

a 150 mm from axis to centre of weight

b 170 mm from axis to test point

c Carbon steel strip 0,64 mm ± 0,05 mm thick

d 140° angle between horizontal plane and the strips' edge

q Total force exerted at test point 8,9 N ± 0,5 N

r Tip rounded with radius 0,115 mm ± 0,025 mm

t Steel strip top angle 90° ± 2°

Figure 5 – Cut susceptibility test

10.11 Continuity test of equipotential bonding MST 13

10.11.1 Purpose

The purpose of this test is to verify the continuous path between accessible conductive parts that are in direct contact with each other (e.g. parts of a metallic frame).

10.11.2 Apparatus

The apparatus is as follows:

a) A constant current supply capable of producing a current that is 2,5 times the maximum overcurrent protection rating of the PV module under test.

b) A suitable voltmeter.

According to IEC 61730-1 the maximum overcurrent protection rating has to be provided by the manufacturer. The maximum overcurrent protection rating is verified in MST 26.

NOTE Common types of overcurrent protection devices are fuses or circuit breakers.

10.11.3 Procedure

The procedure is as follows:

a) Select the manufacturer's designated point for equipotential bonding and the recommended connection. Attach to one terminal of the constant current supply.

b) Select an adjacent (connected) exposed conductive component with the greatest physical displacement from the grounding point and attach to the other terminal of the current supply.

c) Attach the voltmeter to the two conductive components attached to the current supply in proximity to the current leads.

d) Apply a current 250 % ± 10 % of the maximum overcurrent protection rating of the PV module for a minimum of 2 min.

e) Measure the applied current and the resultant voltage drop.

f) Reduce the current to zero.

g) Repeat for all other accessible conductive parts.

h) Repeat the test for all connection(s), terminal(s), and/or wire(s) included or specified by the manufacturer for grounding the PV module.

10.11.4 Final measurements

None.

10.11.5 Pass criteria

The resistance between the selected exposed conductive component and every other conductive component of the PV module shall be less than 0,1 Ω. The resistance shall be calculated from the applied current and the resulting voltage drop measured at the connection points of the PV module (e.g. frame).

10.12 Impulse voltage test MST 14

10.12.1 Purpose

The purpose of the test is to verify the capability of insulation of the PV module to withstand over-voltages of atmospheric origin. It also covers over-voltages due to switching of low-voltage equipment.

10.12.2 Apparatus

The test equipment and procedure shall comply with IEC 60060-1. Due to the variable and comparably high capacity of many samples, compensation measures may be applicable to fulfil the required waveform tolerances, see Figure 6.

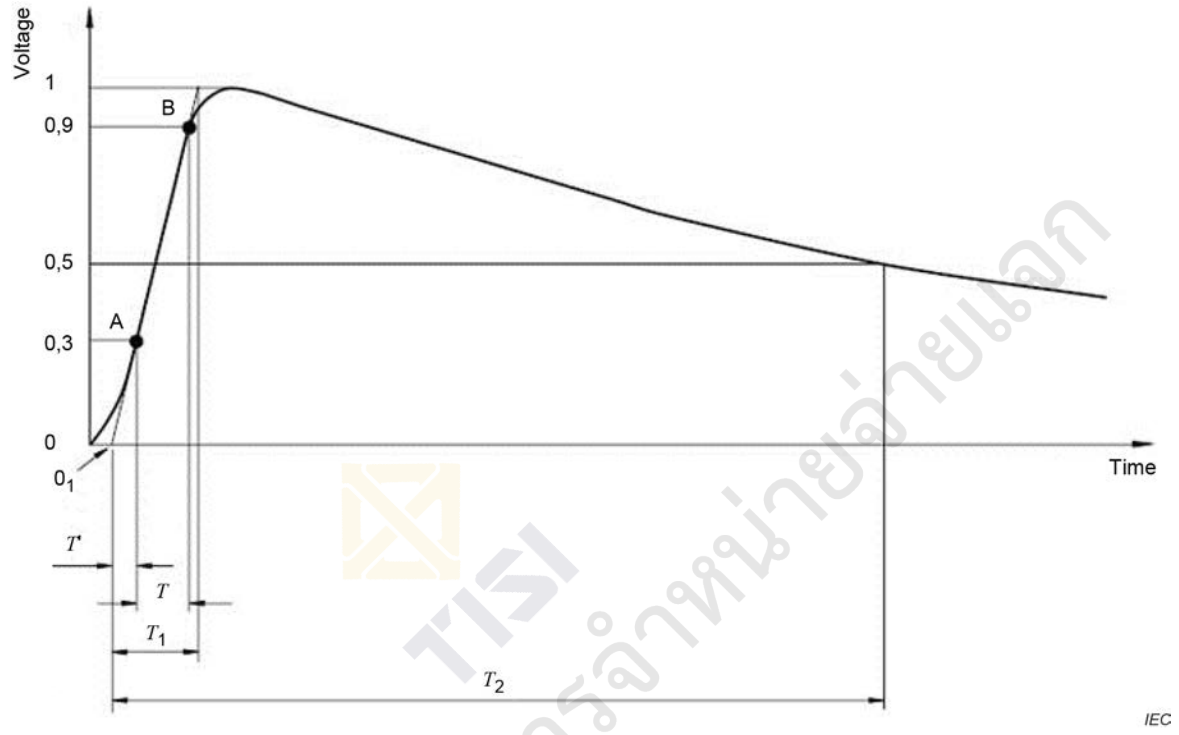

T_1 = 0,84 µs up to 3,12 µs. (T_1 can be calculated with T divided by 0,6)

T_2 = 40 µs up to 60 µs

NOTE The parameter 0_1 is the start point of the impulse voltage. In a diagram with linear time scale this is the intersection point of the time axis and the line defined by points A and B.

Figure 6 – Waveform of the impulse voltage following IEC 60060-1

10.12.3 Procedure

This test is performed on an unframed PV module. If the frame is an integral part of the edge insulation the test can be done with the framed PV module. The impulse voltage test shall be performed in accordance with IEC 60060-1.

For the purposes of test reproducibility this test is conducted under the conditions of room temperature and relative humidity of less than 75 %. The procedure is as follows:

a) Disable any voltage limiting device installed on the PV module, if applicable.

b) Cover the whole PV module with a conductive metal foil using a conductive adhesive to achieve best possible contacting and avoid e.g. bubbles that may influence the test result. The adhesive (conducting glue) shall have an electrical resistance < 1 Ω related to an area of 625 mm^2. Care shall be taken to avoid particle or air enclosure between the foil and the PV module as much as possible. Connect the foil either to the negative or to the positive terminal of the impulse voltage generator.

c) Connect the shorted output terminals of the PV module either to the positive terminal (in case that the foil is connected to the negative terminal) or to the negative terminal (in case that the foil is connected to the positive terminal) of the impulse voltage generator.

d) Apply the surge impulse voltage with a waveform as shown in Figure 6 by the impulse voltage generator. According to IEC 60060-1 the surge impulse peak voltage shall be within ± 3 % of the value given in Table B.1 of IEC 61730-1:2022.

   Linear interpolation of the voltages given in Table B.1 of IEC 61730-1:2022 is allowed for intermediate values of maximum system voltage.

e) The waveform of the pulse shall be verified by an oscilloscope connected as close to the short-circuited PV module terminals as possible or with sufficient terminating impedance on the measurement cable connections. The rise time and the pulse duration shall be checked for each test for compliance with Figure 6.

   Care should be taken that probes are appropriate to guarantee a reproducible measurement.

   NOTE In IEC 60060-1 a test voltage function is defined, representing the response of insulations applicable for signal filtering.

f) Three successive pulses shall be applied.

g) Change the polarity of the pulse and apply three successive pulses.

10.12.4 Final measurement

Repeat visual inspection MST 01 and insulation test MST 16.

If a breakdown occurred, the conductive foil may need to be removed for the visual inspection to identify location of breakdown for analysis. The foil should not be removed until after the Insulation test MST 16 has been performed.

10.12.5 Pass criteria

The pass criteria are as follows:

a) No evidence of dielectric breakdown or surface tracking of the PV module is observed during the test.

b) No evidence of major visual defects as defined in MST 01.

c) MST 16 shall meet the same requirements as for the initial measurements.

10.13 Insulation test MST 16

This test is equivalent to MQT 03 of IEC 61215-2.

10.14 Wet leakage current test MST 17

This test is equivalent to MQT 15 in IEC 61215-2.

Cemented joints within PV modules shall be tested with an increased test voltage. The following applies: U_{Test}(cemented joint) = U_{Test}·1,35 as required by IEC 61730-1. All non-cemented joints shall be tested with normal U_{Test}.

10.15 Placeholder section, formerly Temperature test MST 21

The temperature test MST 21 is no longer a part of this document. This section is preserved so that, in the following sections of the document, the MST numbers match the section numbers.

10.16 Hot-spot endurance test MST 22

This test is equivalent to MQT 09 in IEC 61215-2 this test is applicable with the following modification: Instead of BSI for bifacial modules the test shall be performed with applied bifacial stress irradiance (*aBSI*).

10.17 Fire test MST 23

PV modules may be exposed to external fire conditions, and therefore should be tested for their fire-resistance characteristics when exposed to a fire source originating from outside the PV module, which may include the building on which they are installed or into which they are integrated, or from an adjacent building. Fire resistance requirements for a PV module intended for building applications are defined in local or national building codes.

PV modules as building product – i.e. serving as roof covering materials, elements for building integration or that are mounted on buildings – are subject to specific safety requirements originating from national building codes.

It shall be noted that fundamental requirements for fire safety are not internationally harmonised. It is therefore not possible to define general requirements for fire safety of PV modules as recognition of test results is commonly not practiced.

Fire test requirements are to be included as national differences in this standard. Countries where resistance of building products to external fire or radiant heat is not covered by building codes may refer to Annex B.

10.18 Ignitability test MST 24

10.18.1 Purpose

This test determines the ignitability of PV modules by direct small flame impingement under zero impressed irradiance by external heat sources using vertically oriented test specimens. The test does not replace a fire test; it assesses ignitability, not flammability of outer surfaces of a module. The test method is based on ISO 11925-2:2020.

The test can be performed on full-size PV modules, as preparation of specimens according to ISO 11925-2:2020 (Clause 5) may not always be possible. The requirements given in ISO 11925-2:2020, Clauses 4 to 8, are therefore modified as described below.

If compliance to ISO 11925-2:2020 can be proven by existing approvals, this test can be omitted.

If specimens can be prepared that comply with Clause 5 of ISO 11925-2:2020 and that are identical to the PV module type under test with respect to their material composition, the test procedure given in Clause 7 of ISO 11925-2:2020 may be used without modifications.

The performance of ignitability tests can be dangerous, e.g. as toxic gases can be released. In addition special precautions should be taken when handling test specimens during testing.

10.18.2 Apparatus

10.18.2.1 General

Clause 4 of ISO 11925-2:2020 applies with the following modifications. Subclauses 4.8, 4.11 and 4.12 of ISO 11925-2:2020 do not apply.

10.18.2.2 Combustion chamber

This subclause deviates from 4.2 of ISO 11925-2:2020.

A suitable exhaust system shall ensure, that the air speed 5 cm from the surface of the specimen is not more than 0,2 m/s in vertical direction and 0,1 m/s in horizontal direction.

10.18.2.3 Burner

This subclause deviates from 4.3 of ISO 11925-2:2020.

A gas burner complying with 4.3 of ISO 11925-2:2020 shall be employed, which can be used vertically or tilted at 45° to the vertical axis. In addition the burner shall be rotatable around its vertical axis so that the test flame can be applied to concealed specimen components (e.g. frame parts). The burner shall be mounted so that it can be moved towards and away from the specimen jerk free. During the flame application, the burner shall remain in a fixed position. Spacers according to 4.9.2 and 4.9.3 of ISO 11925-2:2020 are used to position the burner.

The burner shall be fitted with a fine adjustment valve to ensure accurate control of the flame height.

10.18.2.4 Specimen holder

This clause deviates from 4.5 and 4.6 of ISO 11925-2:2020.

The specimen holder shall be constructed such that it allows the specimen to be safely fixed in a vertical position. The bottom side of the specimen shall have an exposed width of at least 30 cm for flame impingement. The specimen shall be placed so that the flame impingement can be determined reliably. The specimen holder shall be able to accommodate specimens of various sizes in both, lengthwise and crosswise orientation.

10.18.3 Test specimen

10.18.3.1 General

This subclause supersedes Clause 5 of ISO 11925-2:2020.

Subclauses 5.1, 5.3 and 5.5 of ISO 11925-2:2020 do not apply.

10.18.3.2 Dimensions

This subclause deviates from 5.2 of ISO 11925-2:2020.

If PV modules are tested they are to be tested in their original size. For type families, a representative PV module type may be selected for testing that has the same material composition as the PV modules it represents. It is sufficient to test one PV module size for PV modules of a type family.

10.18.3.3 Number of specimens

This subclause deviates from 5.4 of ISO 11925-2:2020.

Typically one PV module is sufficient to perform all required tests. The flame application points shall be selected and marked in accordance with 10.18.5.1.

10.18.4 Conditioning

This subclause supersedes Clause 6 of ISO 11925-2:2020.

The specimens shall be conditioned at a temperature of 23 °C ± 2 °C and a relative humidity of 50 % ± 5 % for a minimum period of 48 h.

The specimens shall be arranged within the conditioning environment in such a way that air can circulate around each individual specimen.

10.18.5 Procedure

10.18.5.1 General

Clause 7 of ISO 11925-2:2020 applies with the following modifications.

10.18.5.2 Preliminary operations

This subclause deviates from 7.2 of ISO 11925-2:2020.

The specimen shall be fixed in the specimen holder and aligned vertically using a level.

Check to make sure that the air velocities at the surface of the specimen comply with 10.18.2.2.

All exposed combustible materials shall be tested. Materials present in different thicknesses shall be tested at least at the thickest and the thinnest point. The flame application points are set according to 4.9.2 (edge exposure) and 4.9.3 (surface exposure) of ISO 11925-2:2020 and shall be marked. Each test shall be performed on three comparable specimen locations.

Components such as junction boxes, cables and connectors do not need to be tested with this test method as these components have separate flammability requirements specified in IEC 61730-1. Similarly, non-combustible materials such as glass and metal do not need to be tested with this test method.

10.18.5.3 Testing operations

Subclauses 7.3.1 and 7.3.2 of ISO 11925-2:2020 apply. With respect to 7.3.2, a flame application time of 15 s applies.

The exposure conditions described in 7.3.3 of ISO 11925-2:2020 are modified as follows.

a) Surface exposure

   The flame shall be applied at least 40 mm above the bottom edge of the specimen. Each different surface, which may be exposed in practice, shall be tested.

b) Edge exposure

   The flame shall be applied to the bottom edge of the specimen. The flame application point is located 1,5 mm behind the leading edge. If the edges of the specimen are made of non-combustible materials (e.g. metal frame), edge exposure may be omitted. Where accessible to direct flame exposure, it may be necessary to test frame adhesives.

   For multi-layer products with unprotected edges, additional tests shall be performed. In this case, the burner shall be rotated 90° around its vertical axis to apply the flame to the combustible layers at the side edges of the specimen as shown in Figure 7.

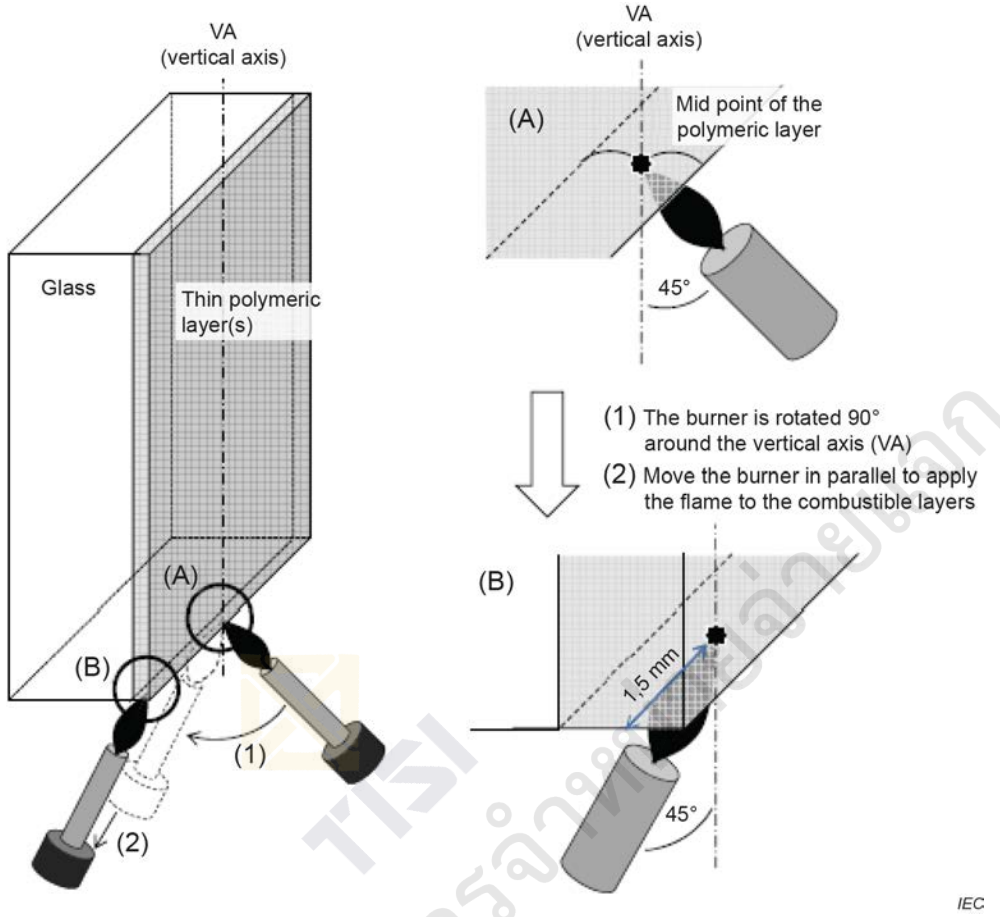

a) Application of burner for a multilayer glass-polymer module

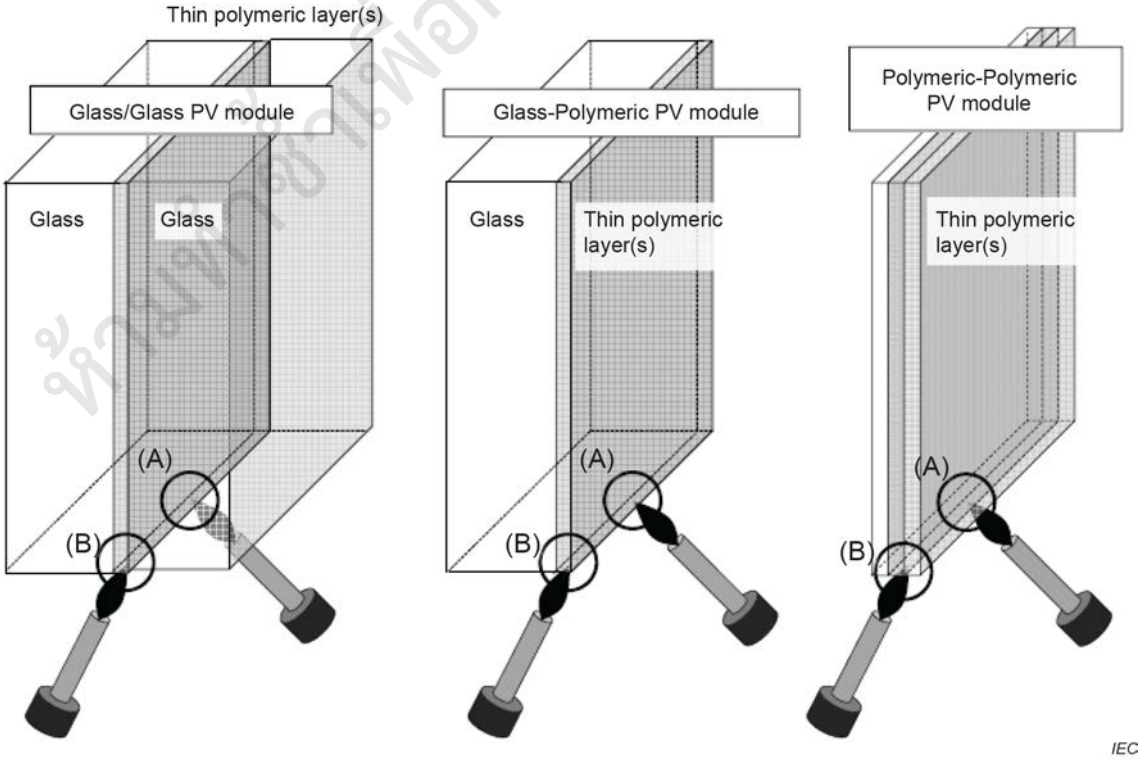

b) Overview: Application of burner for glass-glass, glass-polymeric, and polymeric-polymeric PV modules

Figure 7 – Application of burner for multilayer products

Subclause 7.3.4 of ISO 11925-2:2020 does not apply.

10.18.6 Duration of test

Subclause 7.4.1 of ISO 11925-2:2020 applies (15 s flame application time 20 s total test duration), 7.4.2 of ISO 11925-2:2020 does not apply.

10.18.7 Expresssion of results

This subclause supersedes Clause 8 of ISO 11925-2:2020.

The type of flame application shall be noted (surface exposure and/or edge exposure).

For each test, the following results shall be recorded:

a) whether ignition occurs;

b) whether the flame tip reaches a height of 150 mm above the flame application point, and the time at which this occurs;

c) the maximum flame height during the test;

d) observations regarding the behavior of the specimen;

e) the length of the destroyed area.

10.18.8 Pass criteria

No ignition or, under conditions of surface flame attack and, where required, edge flame attack, with 15 s exposure time, there shall be no flame spread in excess of 150 mm vertically from the point of application of the test flame within 20 s from the time of application.

10.19 Bypass diode thermal test MST 25

This test is equivalent to MQT 18 in IEC 61215-2. Both, MQT 18.1 and MQT 18.2 shall be performed. For bifacial modules the test shall be performed with $I_{SC\text{-}aBSI}$ instead of $I_{SC\text{-}BSI}$.

10.20 Reverse current overload test MST 26

10.20.1 Purpose

PV modules contain electrically conductive material contained in an insulating system. Under reverse current fault conditions the electrical conductors and the cells of the PV module are forced to dissipate energy as heat prior to circuit interruption by an over-current protector installed in the system. This test is intended to determine the acceptability of the risk of ignition or fire from this condition or other catastrophic thermal damage to the module.

10.20.2 Apparatus

a) The temperature shall be recorded by an infrared camera with the following specifications and settings:
   - Emissivity ε: 0,95 for polymeric materials
   - 0,90 for glass surfaces
   - Resolution: 1 pixel corresponds to < 5 mm
   - Thermal sensitivity: ≤ 0,1 K at 30 °C
   - Absolute error of measurement: ± 5 K
   - Measurement range: 0 – 200 °C
   - Spectral response: 8 – 14 µm

b) Means for applying a continuous current as specified in Procedure 10.20.3.

10.20.3 Procedure

The PV module under test should be mounted with the module sunny side down if junction box is mounted on the rear side. The front to underlying surface clearance shall be the minimum clearance specified in the manufacturer's mounting instructions. If the instructions offer more than one option, the option providing the worst-case clearance shall be used. If no indications have been provided for spacing, or if the module manufacturer allows mounting flush to the supporting surface within the product mounting guidelines, the module front or rear shall be mounted in contact on a solid support that has sufficient mechanical strength to avoid warping under temperature influence. The thermal conductivity of the support shall be not higher than 0,5 W/(m·K).

Care shall be taken to mount the module in a manner that avoids interference with the junction boxes or similar height obstructions. As a result, front-mounted junction boxes should be tested with the module rear surface mounted to the test structure and if junction boxes are mounted on the rear surface, the module shall be flush-mounted to the front surface.

Any blocking diode (not bypass diodes) provided shall be defeated (short-circuited). The test shall be conducted in an area free of drafts (see IEC 60695-2-10 for comparable requirements).

The irradiance on the cell area of the PV module shall be less than 50 W/m^2 to be ensured through a dark environment. In case there is a possible contribution to the photocurrent of the PV module (e.g. through a transparent back side or a bifacial cell concept) this shall be ensured through a dark environment. An additional shading cover to the back is not allowed since it would influence the thermal insulation.

A laboratory DC power supply shall be connected to the PV module with positive output connected to the positive terminal of the PV module. The applied reverse current (I_{TEST}) shall be equal to 135 % of the PV module's overcurrent protection rating, as provided by the manufacturer. The test supply current should be limited to the value of I_{TEST}, and the test supply voltage shall be increased to cause the reverse current to flow through the PV module. During a 2 h test period the temperature shall be recorded and the hottest point determined, by using an infrared camera. The camera orientation shall be perpendicular to the module plane. Care shall be taken to avoid intense heat or light sources that might reflect on the glass surface. The test shall be conducted at ambient air temperature of 23 °C ± 5 °C in an environment where the ambient air is still with no forced circulation.

Throughout the test the current flow shall be kept stable within ± 2 % (this may require the voltage to be adjusted).

The maximum over-current protection rating of a PV module can be interpreted as the PV module series fuse rating. A series fuse may be required in the installation of PV arrays. According to IEC 61730-1 the maximum over-current rating has to be provided by the manufacturer.

NOTE 1 A method to determine the PV module's limiting reverse current I_R capacity can be found in EN 50380.

NOTE 2 IEC TS 62446-3 provides guidance on the use of IR-cameras.

10.20.4 Pass criteria

The pass criteria are as follows:

a) MST 01 shall meet the same requirements as for the initial measurements.

b) MST 16 shall meet the same requirements as for the initial measurements.

c) MST 17 shall meet the same requirements as for the initial measurements.

d) The maximum external module surface temperature during the test as measured by the infrared camera shall not exceed 170 °C.

10.21 Module breakage test MST 32

10.21.1 Purpose

The purpose of this test is to provide confidence that risk of physical injuries can be minimized if the PV module is broken in its specified installation. It does not cover electric shock, only e.g. piercing cuts and fall through injuries.

For building integrated or overhead applications additional tests may be required according to relevant building codes.

Class 0 modules for use in restricted areas are not required to be tested.

NOTE MST 32 is based on ANSI Z97.1.

10.21.2 Apparatus

The apparatus is as follows:

a) The impactor shall be a bag made of a suitable material and capable to be filled to the required weight using a suitable filling material (e.g. steel balls or pellets). The exterior of the bag shall be wrapped with tape as shown in Figure 8 in order to avoid uneven surfaces like stitching. When filled, the impactor bag shall have dimensions as described in Figure 8 and a weight of 45,5 kg ± 0,5 kg. The ratio of widest diameter to height shall be between 1:1,5 to 1:1,4.

b) A test frame similar to that shown in Figure 9 and Figure 10 shall be provided with sufficient stiffness to minimise movement and deflection during testing. The frame shall be welded or securely bolted at the corners to minimize twisting during impact. It shall also be bolted to the floor to prevent movement during impact testing.

NOTE Structure framing and bracing made from steel channel (approximately 100 mm × 200 mm or larger) with a minimum moment of inertia of approximately 187 cm^4 has been found to provide sufficient stiffness.

10.21.3 Procedure

Mount the PV module sample so that it is centred and rigid on the test frame using the method and parts described by the manufacturer including a defined torque if screws are used for mounting. If different mounting options are possible the test shall cover the range of mounting techniques.

The procedure is as follows:

a) At rest the impactor bag shall hang no more than 13 mm from the surface of the PV module sample and no more than 50 mm from the centre of the PV module sample.

b) Lift the impactor centre to a drop height of 300 mm from the centre of its resting position (see Figure 9), allow the impactor to stabilize, and then release it to strike the PV module sample.

10.21.4 Pass criteria

The PV module shall be judged to have successfully passed the module breakage test if it meets the following criteria: a) and either b) or c):

a) The PV module may not separate from the mounting structure or from the framing.

b) No breakage occurs.

c) If breakage of the PV module occurs, no shear or opening large enough for a 76 mm diameter sphere to pass freely shall develop and no particles larger than 65 cm^2 shall be ejected from the sample. In order to allow measurement of the particles, breakage into smaller pieces shall be avoided when dropping on the floor, e.g. by a cushion.

If the test specimen has to be checked according to 5.4.5 of IEC 61730-1:2022 (form/press/tight fit) a continuity of equipotential bonding test (MST 13) shall be passed successfully before and after MST 32.

Dimensions in millimetres

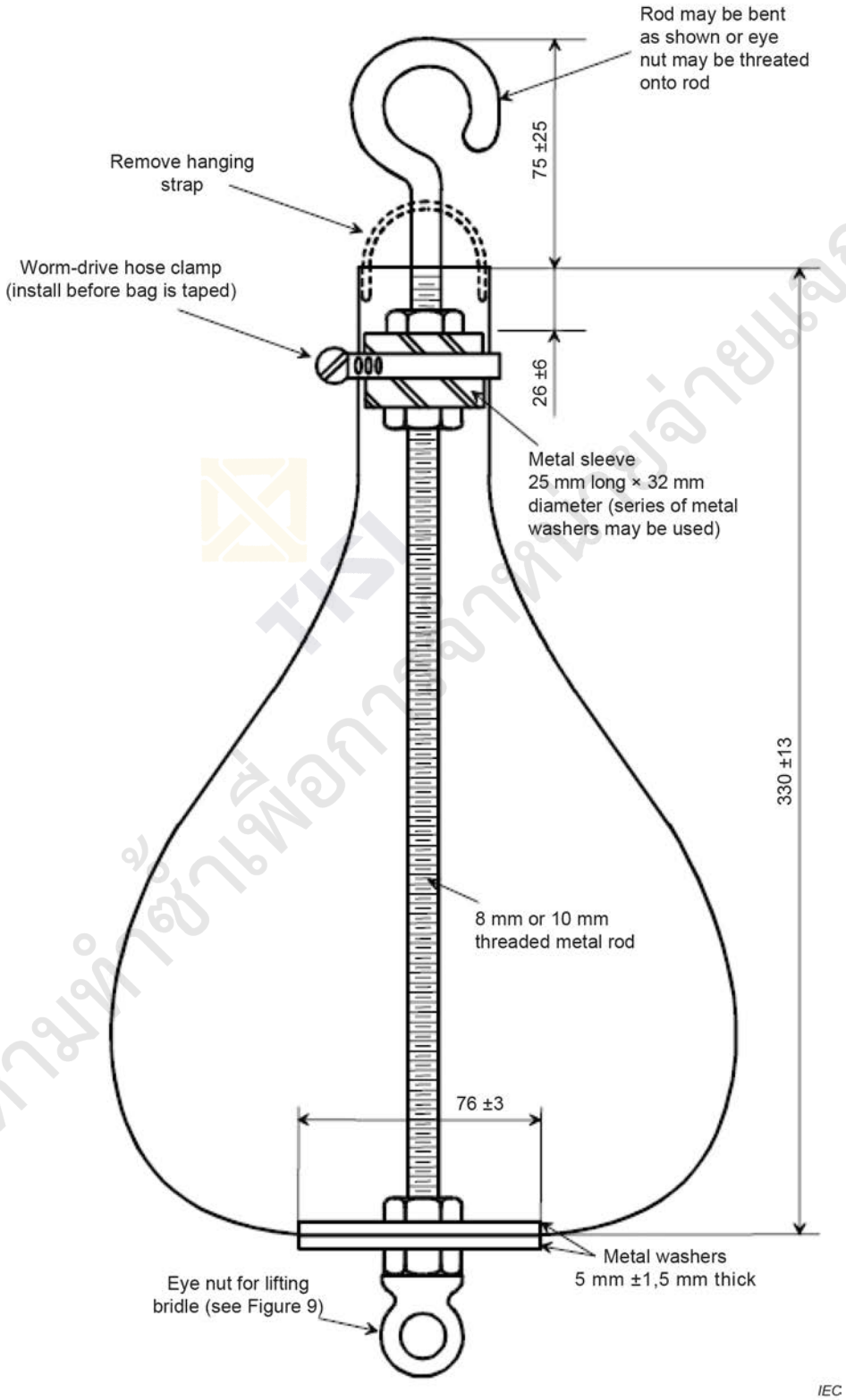

Filled bag has a total weight of assembly of 45,5 kg ± 0,5 kg.

Tape bag with 13 mm wide tape use 3 rolls (165 m) and tape in diagonal, overlapping manner. Cover entire surface of bag. Tape neck separately.

Figure 8 – Impactor

Dimensions in millimetres

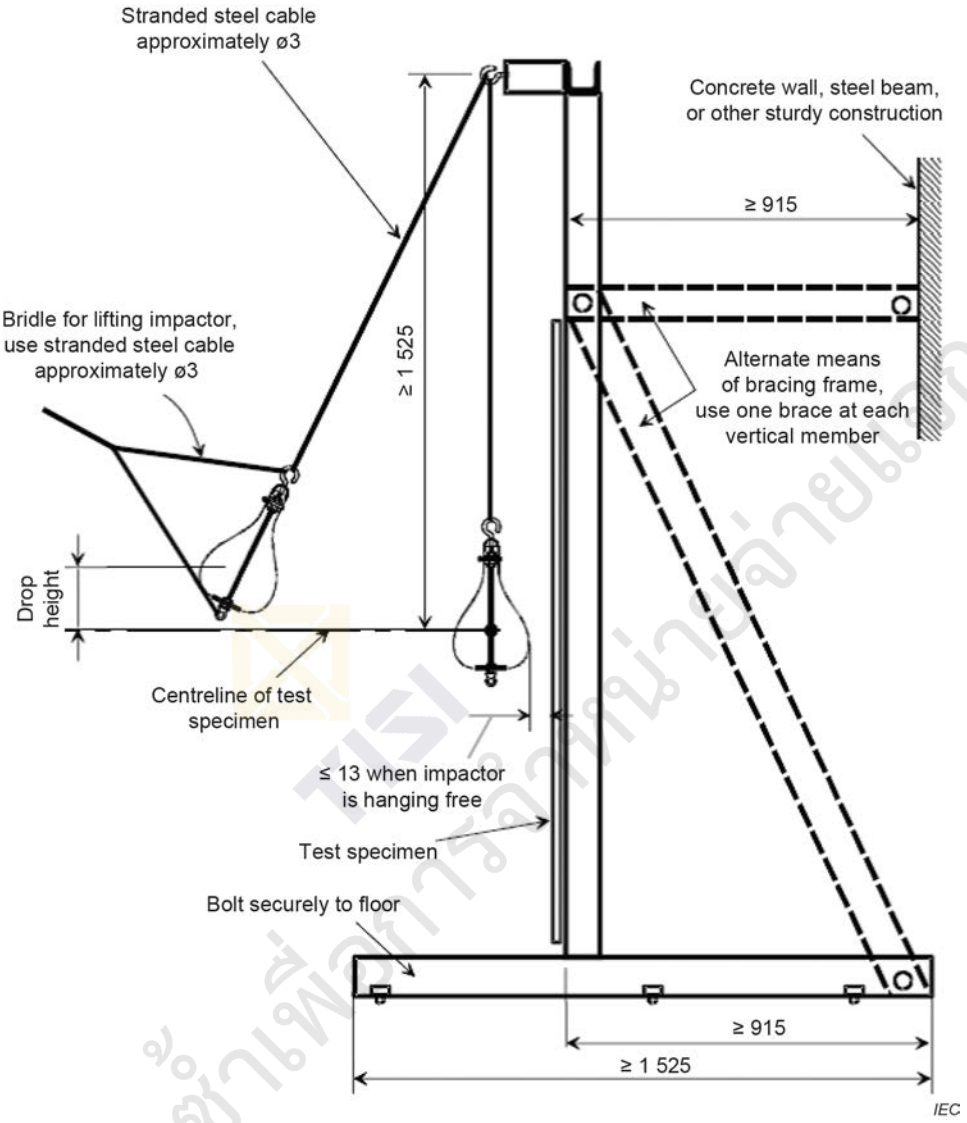

Figure 9 – Impact test frame 1

Dimensions in millimetres

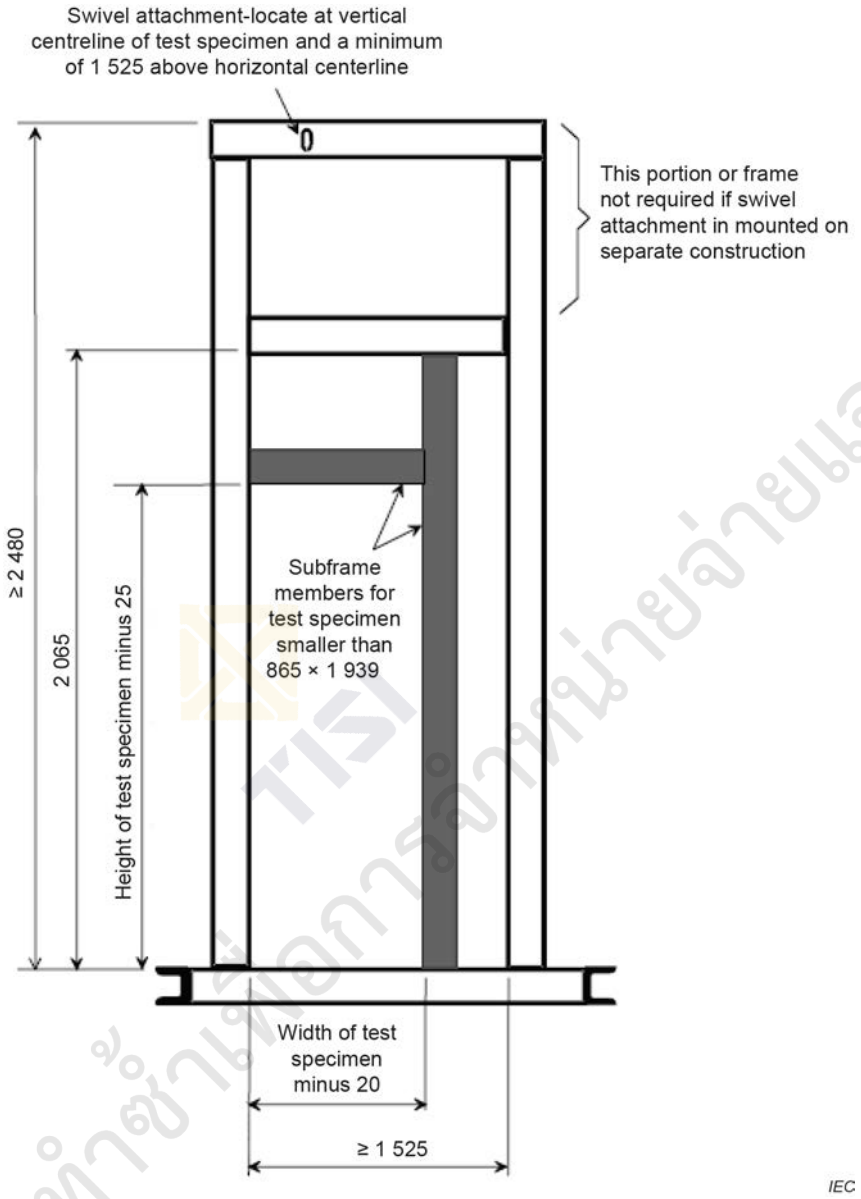

Clamping frame for holding test specimen not shown.

Figure 10 – Impact test frame 2

10.22 Screw connections test MST 33

10.22.1 Test for general screw connections MST 33a

10.22.1.1 General

Components such as screws and nuts transmitting contact pressure or which are likely to be tightened by the user shall be tightened and loosened five times. Screws and nuts of insulating material shall be removed completely during each operation of loosening of the screws.

The test is made by means of a suitable test screwdriver or spanner, applying a torque as shown in Table 8, except that for screws of insulating material used in cord anchorage and bearing directly on the cable or cord, the torque is 0,5 Nm.

If the manufacturer specifies a higher torque in their installation instructions, that torque shall be used for testing. This shall be noted in the test report.

Table 8 – Torque tests on screws per IEC 60598-1:2014, Table 4.1

Nominal outer thread diameter of screw mm	Torque Nm		
	Type 1	Type 2	Type 3
Up to and including 2,8	0,20	0,40	0,40
Over 2,8 up to and including 3,0	0,25	0,50	0,50
Over 3,0 up to and including 3,2	0,30	0,60	0,50
Over 3,2 up to and including 3,6	0,40	0,80	0,60
Over 3,6 up to and including 4,1	0,70	1,20	0,60
Over 4,1 up to and including 4,7	0,80	1,80	0,90
Over 4,7 up to and including 5,3	0,80	2,00	1,00
Over 5,3 up to and including 6,0	–	2,50	1,25
Over 6,0 up to and including 8,0	–	8,00	4,00
Over 8,0 up to and including 10,0	–	17,00	8,50
Over 10,0 up to and including 12,0	–	29,00	14,50
Over 12,0 up to and including 14,0	–	48,00	24,00
Over 14,0 up to and including 16,0	–	114,00	57,00

The shape of the blade of the screwdriver shall suit the head of the screw to be tested. The screws shall not be tightened in jerks. Damage to covers is neglected.

Type 1 of Table 8 applies to metal screws without heads if the tightened screw does not protrude from the hole.

Type 2 applies to:

- other metal screws and to nuts;
- screws of insulating material
  - having a hexagonal head with the dimensions across flats exceeding the overall thread diameter;
  - having a cylindrical head and a key socket with a cross-corner dimension exceeding the overall thread diameter;
  - having a head with a slot or cross slots, the length of which exceeds 1,5 times the overall thread diameter.

Type 3 applies to other screws of insulating material.

10.22.1.2 Pass criteria

During the test, no damage impairing the further use of the fixing or screwed connection shall occur. After the test, it shall still be possible to introduce the screw or nut made of insulation material in the intended manner.

10.22.2 Test for locking screws MST 33b

10.22.2.1 General

A thread-lock that softens on heating provides satisfactory locking only for screw connections not subject to torsion in normal use. Such connections shall be tested by attempting to loosen locked screws with the following torque:

- 2,5 Nm for thread size ≤ M 10 or corresponding diameters;
- 5,0 Nm for thread sizes > M 10 or corresponding diameters.

The test torque shall be applied for 1 min in a clockwise direction and then for 1 min in an anti-clockwise direction at a stabilized temperature of (70 ± 5) °C.

10.22.2.2 Pass criteria

No loosening shall occur.

10.23 Static mechanical load test MST 34

10.23.1 General

This test is equivalent to MQT 16 in IEC 61215-2.

MQT 15 can be omitted.

10.23.2 Pass criteria

a) Requirements apply as in IEC 61215-2 MQT 16;

b) MST 13 shall meet the same requirements.

10.24 Peel test MST 35

10.24.1 Purpose

The purpose of this test is to qualify insulation as a cemented joint. It shall provide confidence regarding the durability of the adhesion between different layers of rigid-to-flexible or flexible-to-flexible constructions of the PV module stack. The test method is taken from ISO 813 and determines the adhesive strength between polymeric materials bonded on a frontsheet or backsheet.

The test is not required, if clearance and creepage distances as required by class, pollution degree and material group are in accordance with either the figures in Table 3 or Table 4 of IEC 61730-1:2022, respectively.

This test is not applicable to rigid-to-rigid bonded assemblies (e.g. glass/glass PV modules). Assessment is done by MST 36.

10.24.2 Sample requirements

For cemented joints with a width ≤ 10 mm the following procedure shall be used to prepare 2 special laminates (1 reference sample (not-aged) and 1 sample for sequence B testing with front side exposed) in the factory:

The sample shall be prepared as illustrated in Figure 11 for all locations as specified in Figure 12. A release sheet (e.g. Teflon) is to be inserted along the boundary of the cemented joint under test between the encapsulant layer and the backsheet. This is to ensure that the peel test is only conducted on the cemented joint area and not at a combination of cemented joint and encapsulant. It shall be close to the cemented joint but shall not penetrate the cemented joint area. For final peel sample preparation and cutting procedure refer to 10.24.4.

If non-rigid frontsheets and rigid backsheet are used the procedure shall be applied from the front side.

If frontsheet and backsheet are non-rigid the procedure shall be applied from both sides, keeping the surface that is not peeled flat to a plate e.g. with an adhesive.

For qualification of cemented joints $>$ 10 mm no special preparation is needed. A typical laminate shall be used.

Dimensions in millimetres

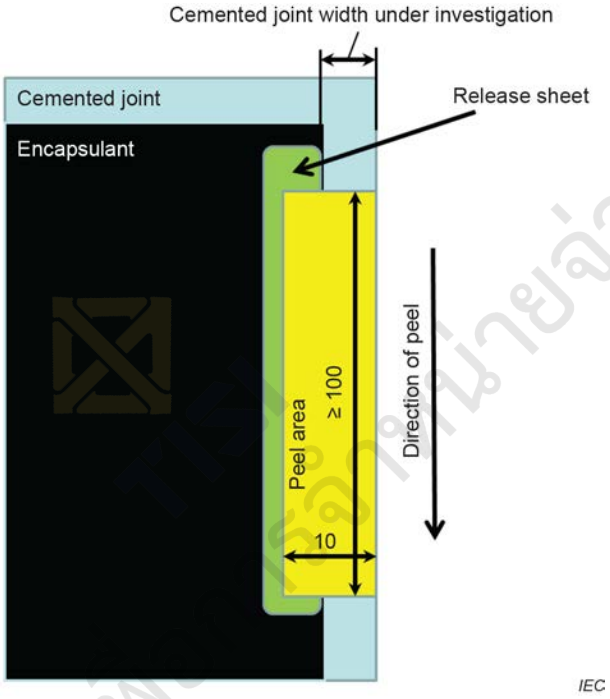

NOTE The yellow area highlights the cuts for the peel test after conditioning.

Figure 11 – Sample preparation of cemented joints ≤ 10 mm using a release sheet

10.24.3 Apparatus

The apparatus is as follows:

a) Tensile-testing machine, complying with the requirements of ISO 5893, capable of measuring force with an accuracy corresponding to class 1 and with a rate of traverse of the moving grip of 50 mm/min ± 5 mm/min.

b) Fixture, for holding the test piece to the moving grip of the testing machine in a) so that the direction of pull to cause separation is at all times during the test 90° ± 10° to the plane of the bond between the polymer and the rigid backsheet, i.e. making an angle of 90° with the surface of the fixture.

10.24.4 Procedure

An unconditioned unframed reference PV module (typically a new module) and one unframed PV module that has undergone test sequence B of Figure 1, with front side exposed, are used for the peel test. Each module shall be treated according to the following procedure:

a) Condition the samples for at least 16 h at 23 °C ± 2 °C, 50 % RH ± 10 % RH immediately before the test in accordance with the requirements of ISO 23529.

b) Cemented joint width > 10 mm (laminate):

After conditioning ten (5 per interface) strips of 10 mm ± 0,5 mm width and at least 100 mm length shall be cut at the flexible frontsheet or flexible backsheet of the samples as shown in Figure 12. Five strips are to be cut per adhesion interface. Adhesion interfaces to be evaluated for classification as cemented joints may include flexible frontsheet or flexible backsheet to cemented joint material (5 peels), and cemented joint material to rigid backsheet or rigid frontsheets (5 peels). The strips shall be cut from the same side of the module, however the depth of the cut shall be to the appropriate adhesion interface.

c) Cemented joint width ≤ 10 mm (special laminate):

After conditioning ten strips of 10 mm ± 0,5 mm width and at least 100 mm length shall be cut out of the samples as shown in Figure 12. Five strips are to be cut per adhesion interface. Adhesion interfaces to be evaluated for classification as cemented joints may include flexible frontsheet or flexible backsheet to cemented joint material (5 peels), and cemented joint material to rigid backsheet or rigid frontsheets (5 peels). The strips shall be cut from the same side of the module.

The first cut (position see Figure 12, cut area see yellow box in Figure 11) will allow peel testing of the backsheet to cemented joint material interface (total 5 peels). For investigation of the rigid frontsheet to cemented joint material interface the remaining encapsulant shall be cut to the rigid frontsheet (second cut, underneath yellow box in Figure 11 along release sheet and cemented joint) such that peel will not be influenced by the encapsulant. Care shall be taken that the cemented joint as such is not influenced (total 5 peels).

If other areas in a PV module shall be classified as cemented joint, the locations shown in Figure 12 may be extended to other relevant areas. The concept of release sheet insertion for cemented joints width ≤ 10 mm shall be adopted.

Report the areas where the strips have been cut (e.g. by picture with dimensions).

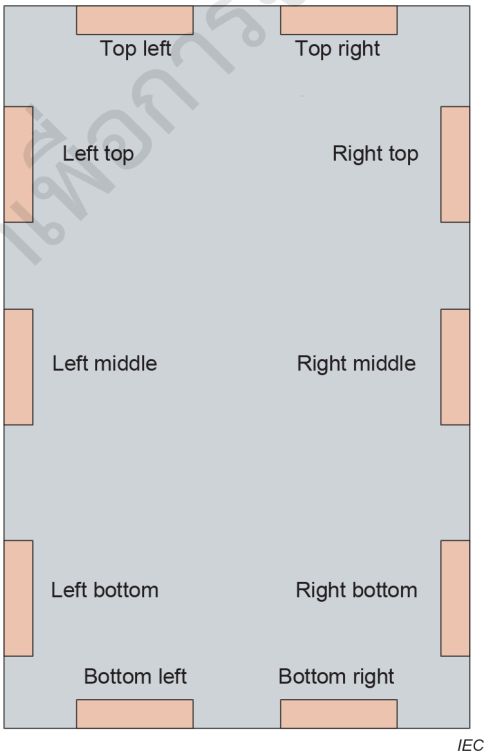

Figure 12 – PV module with positions for peel samples on frontsheet or backsheet

d) The depth of the cut shall be sufficient to completely cut through to the layer of which adhesion shall be measured, but shall not significantly infringe the layer below. A fraction of the strip sufficient in length to be griped by the machine shall be separated manually at the interface under investigation. The strip shall be mounted perpendicularly to the moving grip of the testing machine. Start with the peel test and continue until the complete strip under test is peeled off. The peel strength shall be measured over a length of at least 60 mm.

To provide better comparability of the peel test the use of a template for the sample preparation is recommended.

The length of the piece of strip mounted to the grip depends on the grip design. Usually 10 mm is sufficient. In case more is needed the extra length is to be considered during sample preparation.

e) Place the test piece symmetrically in the fixture. Place the free end of the strip in the grip. Move the grip of the tensile-testing machine at 50 mm/min ± 5 mm/min until separation is complete. Record the force required to cause separation.

f) A time versus force plot over the full length of the test piece shall be made.

g) Report the adhesion strength in newton per mm, by dividing the force (in N) recorded by the width of the test piece (in mm). Report whether adhesive or cohesive failure has been observed for each peel.

h) Only such samples shall be considered showing a continuous peel-off characteristic for at least 20 mm. The mean value of that continuous phase shall be considered when applying the pass criteria (10.24.5). Even if the measured maximum force deviates significantly from the continuous force (compare Figure 13 left) the continuous fraction of the measurement shall be considered.

i) In case visual inspection (MST 01) reveals bubbles or delaminations spaced 20 mm or less apart in the area of the peel, the test shall be conducted such that the affected areas are covered by the peel test. In case of a single large bubble this area shall be covered by the peel test.

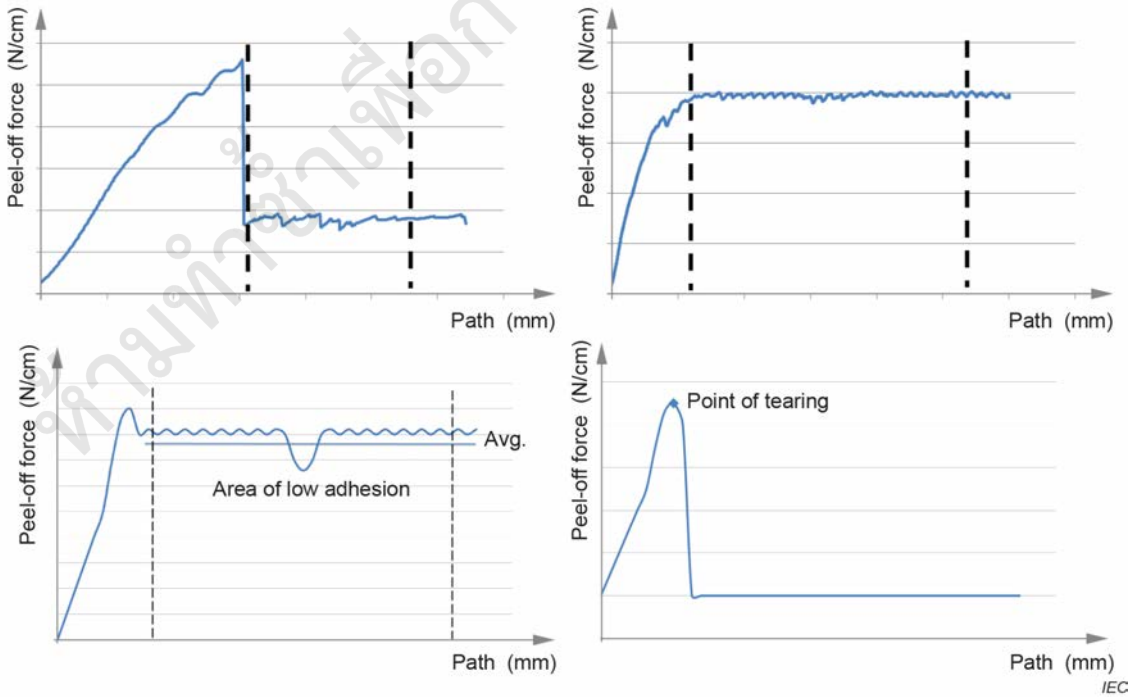

Top left: peak force does not reflect actual adhesion properties and shall be excluded from mean value calculation.

Top right: optimal curve, evaluation of the continuous part of the curve.

Bottom left: peel strength curve with local weak adhesion and resulting average.

Bottom right: force at point of tearing (sample breakage).

Figure 13 – Typical peel-off measurement curves

10.24.5 Pass criteria

The PV module shall be judged to have successfully passed the peel test if the loss of adhesion force of the arithmetic mean M for the respective interface of unconditioned (M1) and after stress test of sequence B (M2) is below 50 %. The difference is determined by comparing the mean value of the results of the two samples tested.

$$\frac{\sum_1^n M2}{\sum_1^n M1} > 0{,}5$$

For each PV module type 5 samples at each interface shall be tested. The value relevant for the pass criteria is the mean value of the 5 samples. In case measurements of samples are discarded following criteria above, at least the 3 samples with the lowest adhesion force shall be evaluated. If needed additional samples shall be prepared and evaluated.

If the adhesion force of the interface to be evaluated cannot be obtained (e.g. cohesive failure within the cemented joint) or adhesion failure of other included interfaces or tearing or breaking of the sample during testing then the measured peak force before failure shall be used for evaluation.

If no locations meeting the requirements from 10.24.2 and the requirements from Figure 2 can be identified and tested, the sample has failed the test.

10.25 Lap shear strength test MST 36

10.25.1 Purpose

The purpose of this test is to qualify insulation as a cemented joint. It shall provide confidence regarding the durability of the adhesion between rigid-to-rigid bonded assemblies (e.g. glass/glass PV modules) for cemented joints of the PV module stack. The test is described in ISO 4587 and determines the adhesive strength of rigid substructures bonded by polymeric material.

The test is not required, if clearance and creepage distances as required by class, pollution degree and material group are in accordance with either the figures in Table 3 or Table 4 of IEC 61730-1:2022, respectively.

This test is not applicable to rigid-to-flexible or flexible-to-flexible bonded assemblies (e.g. glass/foil or foil/foil PV modules). For rigid-to-flexible or flexible-to-flexible bonded assemblies MST 35 applies.

10.25.2 Test samples

20 samples in accordance to ISO 4587:2003 made up of identical materials, thicknesses and glass surface structure for frontglass, backglass and adhesive (cemented joint) as the end product (PV module). The adhesive bond of samples shall be representative in every aspect to the end product and hence be built using equivalent production parameters including methods of edge delete and treatment, see Figure 14.

If heat strengthened glass is used in production an equivalent non-tempered glass that is easier to cut samples from can be used.

Dimensions in millimetres

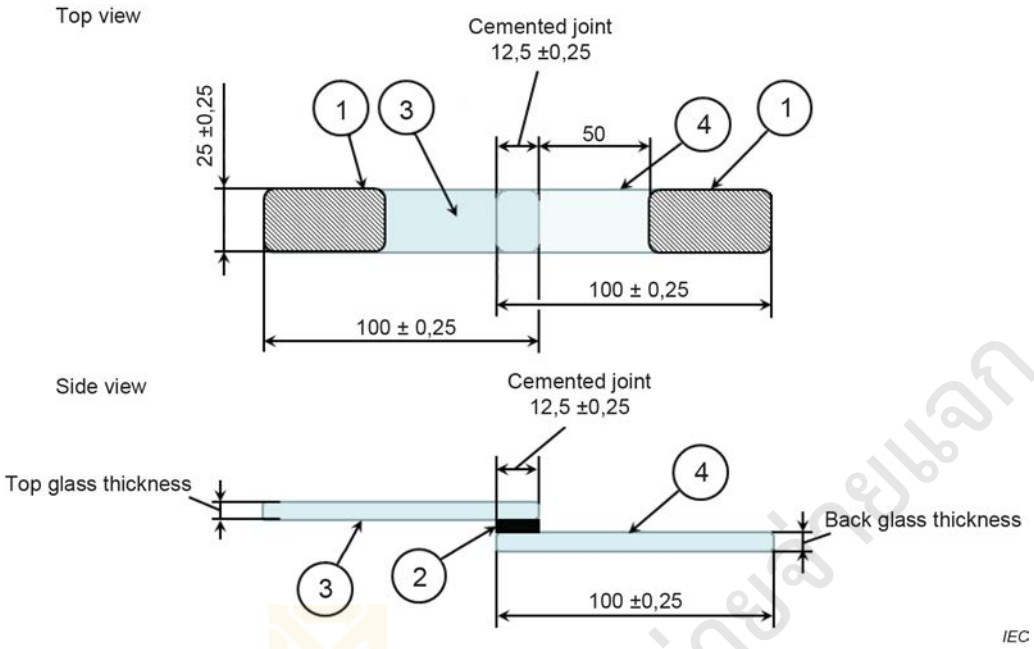

Key

1 Area held in grips
2 Cemented joint
3 PV module front glass
4 PV module back glass

Figure 14 – Lap shear test sample for proving cemented joint

10.25.3 Apparatus

The apparatus (tensile-testing machine) is specified in ISO 4587:2003, Clause 4.

10.25.4 Procedure

A total of 20 bonded test coupons shall be prepared as described in 10.25.2. 10 bonded test coupons are used to determine the pre-weathering breaking force (M1) and 10 bonded test coupons are used to determine the post-weathering breaking force (M2). The test flow is given in Figure 15. In the first UV-test the front glass is exposed to the UV and in the second step the back glass.

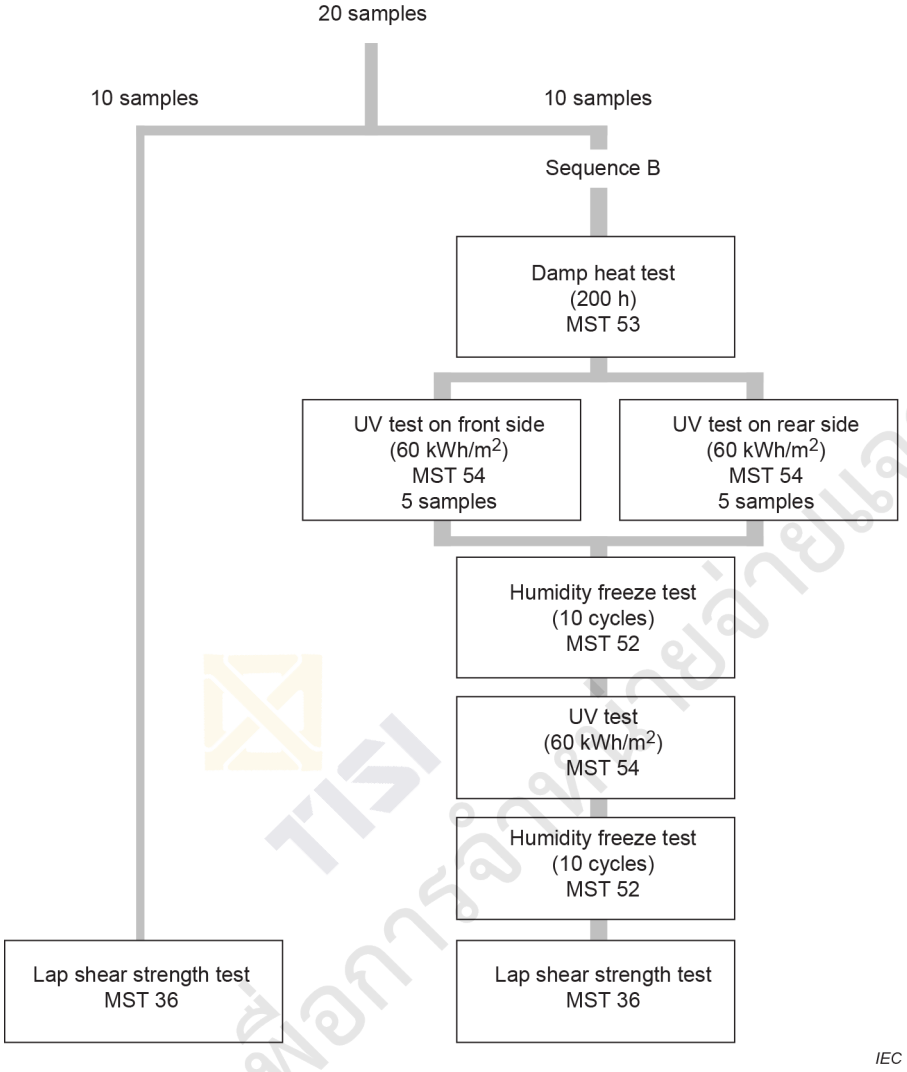

Figure 15 – Lap-shear test flow

Condition the samples for at least 16 h at 23 °C ± 2 °C, 50 % RH ± 10 % RH immediately before the test in accordance with the requirements of ISO 23529.

Operate the machine as described in ISO 4587:2003.

Record the highest force during rupture as the breaking force for that specimen.

NOTE The speed resulting from the values in ISO 4587:2003 is equivalent to about 0,8 mm/min.

10.25.5 Pass criteria

The PV module design shall be judged to have successfully passed the lap shear strength test if the loss in arithmetic mean M (for all 10 samples) of the breaking force for the respective interface before and after weathering is less than 50 %. The difference is determined by comparing the results of the two batches of samples tested.

$$\frac{\sum_1^{10} M2}{\sum_1^{10} M1} > 0{,}5$$

NOTE The lap shear strength, in MPa, is calculated by dividing the breaking force, in newtons, by the shear area, in square millimetres.

In case of the rigid part breaking apart from the interfaces of investigation a thicker or stronger glass shall be used. A suitable support for the glass may also be sufficient.

10.26 Materials creep test MST 37

10.26.1 Purpose

The purpose of the material creep test is to validate that the materials used in the PV module will not show creep or lose adhesion when operated at the highest temperatures that PV modules normally experience in the field. In particular the test shall determine possible creep between the following interfaces:

- frontsheet to backsheet;
- frontsheet or backsheet to directly attached mounting system (e.g. back rail);
- junction box to backsheet respectively frontsheet.

This test is not required to be performed if creep at all interfaces is prevented by mechanical mounting means not relying on adhesion alone.

10.26.2 Apparatus

a) A climatic chamber with automatic temperature control with means for circulating the air inside capable of subjecting one or more samples to the conditions specified in 10.26.3.

b) Means for mounting or supporting the samples in the chamber, so as to allow free circulation of the surrounding air.

c) Means for measuring and recording the temperature of the samples to an accuracy of ± 1 °C.

10.26.3 Procedure

a) Attach a suitable temperature sensor to the front or back surface of the sample near the middle.

b) Install the sample at room temperature in the climatic chamber using the worst case mounting method described in the installation manual. Each sample is to be mounted at the maximum angle permissible as per the installation manual; if no maximum is given the sample is to be mounted vertically in the test chamber.

c) After closing the chamber, subject the sample to 90 °C ± 3 °C. This is a dry heat test without humidity control.

d) Throughout the test, record the sample temperature. Maintain the sample at the specified temperature for 200 h.

10.26.4 Final measurements

After allowing the samples to reach room temperature, repeat tests MST 01, MST 11, MST 13, MST 16, and MST 17.

10.26.5 Pass criteria

In addition to the pass criteria in the tests listed under 10.26.4 the following criteria shall be met:

Meet the creepage and clearance distances as specified in either Table 3 or Table 4 of IEC 61730-1:2022 depending on the PV module Class according to IEC 61140.

10.27 Robustness of terminations test MST 42

This test is equivalent to MQT 14.1 in IEC 61215-2 and shall also be performed for junction boxes compliant to IEC 62790 as required by IEC 61730-1.

In case that the adhesive area between junction box and module shall be considered as cemented joint the tests MST 01, MST 16 and MST 17 shall not be considered as interim tests but as mandatory tests. They shall be performed under consideration of requirements for distances through cemented joint at adhesive area of junction box in MST 57.

MQT 15 can be omitted.

10.28 Thermal cycling test MST 51

This test is equivalent to MQT 11 in IEC 61215-2 with the following modification. Figure 1 shows which version (50 cycles or 200 cycles) is to be applied with the samples.

For bifacial crystalline silicon photovoltaic modules for the 200 cycles instead of $I_{\text{mp-BSI}}$ the test shall be performed at $I_{\text{mp-aBSI}}$.

MQT 15 can be omitted.

10.29 Humidity freeze test MST 52

This test is equivalent to MQT 12 in IEC 61215-2.

10.30 Damp heat test MST 53

This test is equivalent to MQT 13 in IEC 61215-2. In this standard two versions of the test are applied. One with the standard duration as described in IEC 61215-2 (1 000 h) and one with a reduced duration of minimum 200 h (+16 h). The applicable test version is defined in Figure 1.

A 5 N load is to be attached to the junction box according to the weight attachment procedure in 10.28 during the damp heat test in Sequence D only.

10.31 UV test MST 54

This test is equivalent to MQT 10 in IEC 61215-2 except that in sequence B it is applied to the front-side of one module and the back-side of another module. The UV dose of MST 54 to be applied is defined in Figure 1.

MQT 15 can be omitted.

In case the module is intended for limited use such that the backside will never be exposed to UV light, for example shingle tiles or other BIPV applications, the tests of sequence B may only be performed with the front side exposure.

For sequence C it is applied to the front-side of one module. This applies also for bifacial modules.

10.32 Cold conditioning test MST 55

10.32.1 Purpose

The purpose of this test is to evaluate a PV module for applicability of Pollution Degree PD = 1. The test and the test sequence are in accordance to IEC 61010-1 and adapted to be applicable for PV modules.

10.32.2 Apparatus

The test shall be performed in a climatic chamber capable to fulfil requirements of test procedure. The climatic chamber shall fulfil requirements of IEC 60068-3-5.

10.32.3 Procedure

Cold conditioning shall be performed as defined in IEC 60068-2-1:2007, procedure Ab.

a) Attach a suitable temperature sensor to the front or back surface of the PV module near the middle.
b) Place the PV module in the climatic chamber.
c) After closing the chamber, subject the PV module to −40 °C ± 3 °C for 48 h.

NOTE Temperature tolerances are taken from IEC 60068-2-1:2007, 6.2.

10.32.4 Pass criteria

The pass criteria are as follows:

a) No evidence of major visual defects as defined in MST 01.
b) MST 16 shall meet the same requirements as for the initial measurements.

10.33 Dry heat conditioning test MST 56

10.33.1 Purpose

The purpose of this test is to evaluate a PV module for applicability of Pollution Degree PD = 1. The test and the test sequence are in accordance to IEC 61010-1 and adapted to be applicable for PV modules.

10.33.2 Apparatus

The test shall be performed in a climatic chamber capable to fulfil requirements of test procedure. The climatic chamber shall fulfil requirements of IEC 60068-3-5.

10.33.3 Procedure

Dry heat conditioning shall be performed as defined in IEC 60068-2-2:2007, procedure Ab.

a) Attach a suitable temperature sensor to the front or back surface of the PV module near the middle.
b) Place the PV module in the climatic chamber.
c) After closing the chamber, subject the PV module to 90 °C ± 3 °C for 200 h. This is a dry heat test without humidity control.

NOTE Temperature tolerances are taken from IEC 60068-2-2:2007, 6.2.

10.33.4 Pass criteria

The pass criteria are as follows:

a) No evidence of major visual defects as defined in MST 01.
b) MST 16 shall meet the same requirements as for the initial measurements.

10.34 Evaluation of insulation coordination MST 57

10.34.1 Purpose

The purpose of this test is to evaluate if the minimum clearances and creepage distances, distances through cemented joints as well as distance through functional insulation given in Tables 3 and 4 of IEC 61730-1:2022 are met. For distances inside a junction box, after installation and termination of ribbons, the minimum values of IEC 62790 have to be met.

NOTE Specific use cases are shown in Annex C of IEC 61730-1:2022.

10.34.2 Apparatus

The test shall be performed by application of

- calibrated measurement devices, e.g. calliper, microscope, etc.;
- the impulse voltage testing device described in 10.12.2 (MST 14) using different voltages (see 10.34.3.3), if applicable;
- the insulation test apparatus described in 10.13 (MST 16) (see 10.34.3.4), if applicable.

10.34.3 Procedure

10.34.3.1 General

The verification of clearances and creepage distances shall be performed according to the general rules and regulations of IEC 60664-1:2020, Clause 6, under consideration of the requirements given in IEC 61730-1:2022.

The verification of distances between conductive parts of different potential through functional insulation shall be performed according to 10.34.3.4.

Clearances and creepage distances are verified as a minimum by physical measurement.

10.34.3.2 Creepage distances

Creepage distances shall be verified by physical measurement under consideration of influencing factors like voltage, pollution degree, material group, etc.

10.34.3.3 Clearances

For the verification of clearances two cases shall be considered:

a) For values according to Tables 3 or 4 under consideration of Table 5 of IEC 61730-1:2022, verification by physical measurement is required, and no further verification by voltage test is needed.

b) For values smaller than the values of Tables 3 or 4 of IEC 61730-1:2022 (only used under conditions of pollution degrees 1 and 2, and under condition that the associated creepage distance pass the requirement), clearances shall be verified by an impulse voltage test.

   The test voltage corresponds to the rated impulse voltage specified in Table 11 of IEC 61730-1:2022 under consideration of the factors for testing and/or operation at different altitudes than 2 000 m. The formula for altitude correction for test voltages at altitudes different than 2 000 m is given in 6.2.2.1.4 of IEC 60664-1:2020. To simplify matters the values from Table 9 and Table 10 may be applied.

   If the clearance between live parts inside the junction box and the outer accessible surface has to be verified by impulse voltage test, a metal foil has to be wrapped around the junction box (see also 5.3.6 of IEC 62790:2020).

c) If the clearance is located at the interface between two layers of a backsheet or at the interface between encapsulant and frontsheet (glass), the impulse voltage test as described in b) and additionally the insulation test MST 16 at the higher AC or DC test voltage of (2 000 V + 4 times of working voltage) shall be performed.

Table 9 – Altitude correction factor for test voltage for operating (installation) altitudes higher than 2 000 m

Specified operating altitude m	Test voltage multiplication factor k_{UO} related to minimum clearance as required in Table 3 and Table 4 of IEC 61730-1:2022 mm		
	cl ≤ 1	1 < cl ≤ 10	10 < cl
0 up to 2 000	1,00	1,00	1,00
2 001 to 3 000	1,04	1,09	1,12
3001 to 4 000	1,09	1,19	1,24
4 001 to 5 000	1,14	1,30	1,40
5 001 to 6 000	1,19	1,43	1,57
6 001 to 7 000	1,25	1,56	1,77

Table 10 – Altitude correction factor for test voltage for testing (laboratory) altitudes lower than 2 000 m

Testing (laboratory) altitude m	Test voltage multiplication factor k_{UL} related to minimum clearance as required in Table 3 and Table 4 of IEC 61730-1:2022 mm		
	cl ≤ 1	1 < cl ≤ 10	10 < cl
0 up to 199	1,08	1,18	1,23
200 to 499	1,08	1,16	1,21
500 to 999	1,06	1,13	1,17
1 000 to 1 999	1,04	1,09	1,11
2 000 or more	1,00	1,00	1,00

The test voltage shall be calculated as follows:

$$U_{Test} = U \times k_{UL} \times k_{UO}$$

where

U_{Test} is the test voltage;

U is the rated impulse voltage according to Table 11;

k_{UL} is the multiplication factor for testing (laboratory) altitude;

k_{UO} is the multiplication factor for operating altitude.

Table 11 – Rated impulse voltages

Rated voltage V DC	Values for the rated impulse voltage for basic insulation Basic insulation ($U_{ratedIV}$) kV (1,2/50µs)	Values for the rated impulse voltage for reinforced insulation Reinforced insulation ($U_{ratedIV}$) kV (1,2/50µs)
50	0,8	1,5
100	1,5	2,5
150	2,5	4,0
300	4,0	6,0
600	6,0	8,0
1 000	8,0	12,0
1 250	8,0	12,0
1 500	10,0	16,0
NOTE Values are derived from IEC 60664-1:2020, Table F.1 for overvoltage category III.		

10.34.3.4 Distances through functional insulation

For the verification of distances between live parts of different potential through functional insulation two cases shall be considered:

a) for values according to line 3a) of Tables 3 or 4 of IEC 61730-1:2022 for functional insulation verification by physical measurement is required and no further verification by voltage test is needed;

b) for values smaller than the values of line 3a) of Tables 3 or 4 of IEC 61730-1:2022 those of line 3b) of Tables 3 or 4 of IEC 61730-1:2022 apply under condition that these distances are verified by a high voltage test with an AC or DC test voltage with (1 000 V + 2 times of working voltage). The voltage shall be applied for 1 min between both end points of the distance in question.

10.34.3.5 Distances through cemented joints at adhesive area of junction box

For junction boxes using adhesive areas as cemented joints due to their typical construction the Peel test MST 35 and Lap shear strength test MST 36 can't be used. To qualify such cemented joints the following tests shall be performed:

- In addition to the Robustness of termination test MST 42 in Figure 1 sequence C for all junction boxes in case of cemented joints the MST 42 shall be performed again in Figure 1 sequence D between Damp heat test MST 53 and Mechanical load test MST 34. For the insulation test MST 16 and the Wet leakage current test MST 17 after Robustness of termination test MST 42 in Figure 1 sequences C, D and E shall be performed with an increased test voltage.
- The following applies: UTest (cemented joint) = UTest·1,35 as required by IEC 61730-1.
- If the criteria of Visual inspection MST 01, Insulation test MST 16 and Wet leakage current test MST 17 (with increased test voltage) after Robustness of terminations test MST 42 are passed, the values for cemented joints as given in Table 3 and Table 4 under consideration of C.2.3 of IEC 61730-1:2022 can be applied for the adhesive area.

For performance of the insulation test a metal foil has to be wrapped around the junction box (see also 5.3.6 of IEC 62790:2020) adjacent to the adhesive area.

10.34.4 Pass criteria

The pass criteria are as follows:

a) The measured values for creepage distances and clearances as well as for distance through functional insulation do not fall below the minimum values listed in Tables 3 and 4 of IEC 61730-1:2022.

b) No evidence of dielectric breakdown as a result of impulse voltage test (if applicable) is observed during the test for verification of the clearances.

c) No evidence of dielectric breakdown as a result of impulse voltage test (if applicable) and high voltage test (if applicable) is observed during test for verification of the distances between two conductive parts of different potential through functional insulation.

ห้ามทำซ้ำเพื่อการจำหน่ายล่วงหน้า TISI

Annex A
(informative)

Recommendations for testing of PV modules from production

A.1 General

This Annex provides guidance how to verify that the production of PV modules continue to meet the minimum safety requirements of this document. Where applicable time based production line measurements may be performed. The tests are to be understood as recommendations and can be replaced by other test procedures that can be expected to yield the same information.

Provisions shall be taken to capture an error of the indication device due to malfunction of the device.

These recommendations can be used to harmonise factory surveillance practices regarding production line measurements.

The information from production line tests may be required within factory surveillance work of certification bodies.

Information for a quality system for PV module manufacturing are provided in IEC 62941.

A.2 Module output power

It is recommended that electrical output power is verified on the final wiring configuration on a 100 % basis. Results from I-V curve measurements can also be used to verify that the current and voltage rating falls within the specification. All production values of I_{sc} and V_{oc} shall be covered by the tolerances of the product qualified under IEC 61730. Possible stabilisation effects shall be considered if changes of I_{sc} and V_{oc} are expected during operation in sunlight. This test will also verify that bypass diodes are not shorted.

A.3 Wet insulation test

This test verifies that the insulation properties of outer surfaces of the production PV modules meet the electrical safety requirements of this document.

Alternative test methods with equivalency are permitted.

The test is conducted in accordance with MST 17 and performed at a sampling rate of at least 1 PV module per laminator per working shift. Test samples shall be put aside until all sealants have set (take into account curing times) and then tested in a batch later.

The sampling rate may be increased or lowered depending on the measurement results.

The test voltage is based on the definition of test MST 17 including a factor Y.

$$U_{TEST} = U_{SYS} \times Y$$

Y = 1 is used for a minimum test duration of 1 min. Y = 1,2 is used for a minimum test duration of 5 s. Ramp-up time for test voltage is chosen such that no time induced breakdown will occur. During the test no breakdown of test voltage shall occur.

The temperature range of the water is 15 °C to 45 °C. The leakage current shall be corrected to 25 °C using a demonstrated correction factor for the PV module, to be determined for each PV module type.

For frameless PV module designs, a 100 % sampling rate is recommended (e.g. to filter production line breakage failures prior to boxing) as part of final tests on module prior to labelling.

For PV modules with cemented joints 100 % sampling rate is recommended. U_{Test} shall be increased by a factor of 1,35 additionally as required by IEC 61730-1:2022, 5.6.3.4.

A.4 Visual inspection

Visual inspection is performed on a 100 % basis aiming to verify that clearance distances (distances of live parts to PV module edges) are within the product specification. It is recommended to do this inspection before the framing process if applicable.

Special care shall be taken if cemented joints are used for insulation. PV modules utilizing cemented joints shall be inspected along all edges and areas with cemented joints on a 100 % basis aimed to verifying the cemented joint spacing visual inspection criteria as defined in 10.2.3 c) are met.

A.5 Bypass diodes

The verification that bypass diodes are working properly is performed on 100 % sampling rate.

Three alternative test methods can be applied:

a) Perform successive additional I-V measurements in conjunction with maximum power determination with one cell of each string in the interconnection circuit completely shaded. The bypass diode belonging to this string is working properly, if the characteristic bend in the I-V curve is observed.

b) A conductivity test can be performed with the PV module terminals connected in reverse polarity to a current source. The current flow and voltage drop across the PV module terminals can be used as indicator that the diodes are working properly.

c) The I-V characteristics of all diodes can be verified just before their assembly. If the bypass diodes are in the junction box this could be done through measurement at the corresponding terminals of the junction box. A precondition for the latter method is an appropriate plan to mitigate possible influence of electrostatic discharges on the diodes in production.

NOTE Bypass diode verification procedures might be MQT 18.2 from IEC 61215-2 and IEC TS 62916.

A.6 Continuity test of equipotential bonding

PV modules provided with a connection for equipotential bonding are subjected to a continuity test for equipotential bonding (MST 13). At a sampling rate of 1 PV module per framing station per working shift demonstrate the electrical continuity between the grounding connection and all accessible conductive parts. Any appropriate indication device may be employed (current supply in conjunction with current and voltage measurement).

Other production processes than fully automatic production may require a higher sampling rate.

PV modules that have no frames or equipotential bonding locations identified shall be exempt from this requirement.

Annex B
(informative)

Fire tests, spread-of-flame and burning-brand tests for PV modules

B.1 General

PV modules mounted in or on buildings, in general, shall fulfil national building and construction regulations and requirements. If such requirements are not available, the following international and national standards give information for tests, which could be used:

ISO 834-1, *Fire-resistance tests – Elements of building construction – Part 1: General requirements*

ISO TR 834-3, *Fire-resistance tests – Elements of building construction – Part 3: Commentary on test method and guide to the application of the outputs from the fire-resistance test*

ISO 5657, *Reaction to fire tests – Ignitability of building products using a radiant heat source*

EN 13501-5, *Fire classification of construction products and building elements – Part 5: Classification using data from external fire exposure to roofs tests*

ENV 1187-1 through ENV 1187-4, *Test methods for roof coverings under the influence of a thermal attack of burning brands and radiant heat*

ANSI/UL 790: *Standard Test Methods for Fire Tests of Roof Coverings*

ANSI/UL 61730-2: *Photovoltaic (PV) Module Safety Qualification – Part 2: Requirements for Testing.*

B.2 Fire test for PV modules based on ENV 1187

B.2.1 General

The ENV 1187 fire test methods, parts 1 to 4, differ in terms of radiant heat, the used brands, additional air flow (wind simulation), tilt angels, amount and size of the demanded test specimen. The pass criteria for each test method are described in EN 13501-5.

In general building integrated PV systems shall be tested in conjunction with a defined mounting system following the installation instruction of the PV module manufacturer. When testing PV modules, the mounting material and the joints between PV modules as well as sealing materials have to be considered and included in the test set-up.

The test sample requirements for the test method based on ENV 1187-1 (classification B_{ROOF} (t1)) are described below to provide an example.

B.2.2 External fire exposure to roofs

Part 1: Methods of test simulating exposure to burning brands, without wind or supplementary radiant heat.

The test can be performed for either one or both roof tilt angle ranges of 0° to 45° at 15° and for roof tilt ranges of 45° to 90° at 45°.

Requirements per roof pitch:

- A realistic roof construction including cross beams and all attachment parts with the PV modules installed the same as in a final system installation shall be provided by the PV module manufacturer.
- The minimum size for a test deck is 0,8 m × 1,8 m. Since it is also necessary to test transverse and vertical joints, several samples may be required to build up the complete test deck.

Figure B.1 shows an example test set-up for the fire test following ENV 1187-1.

Dimensions in metres

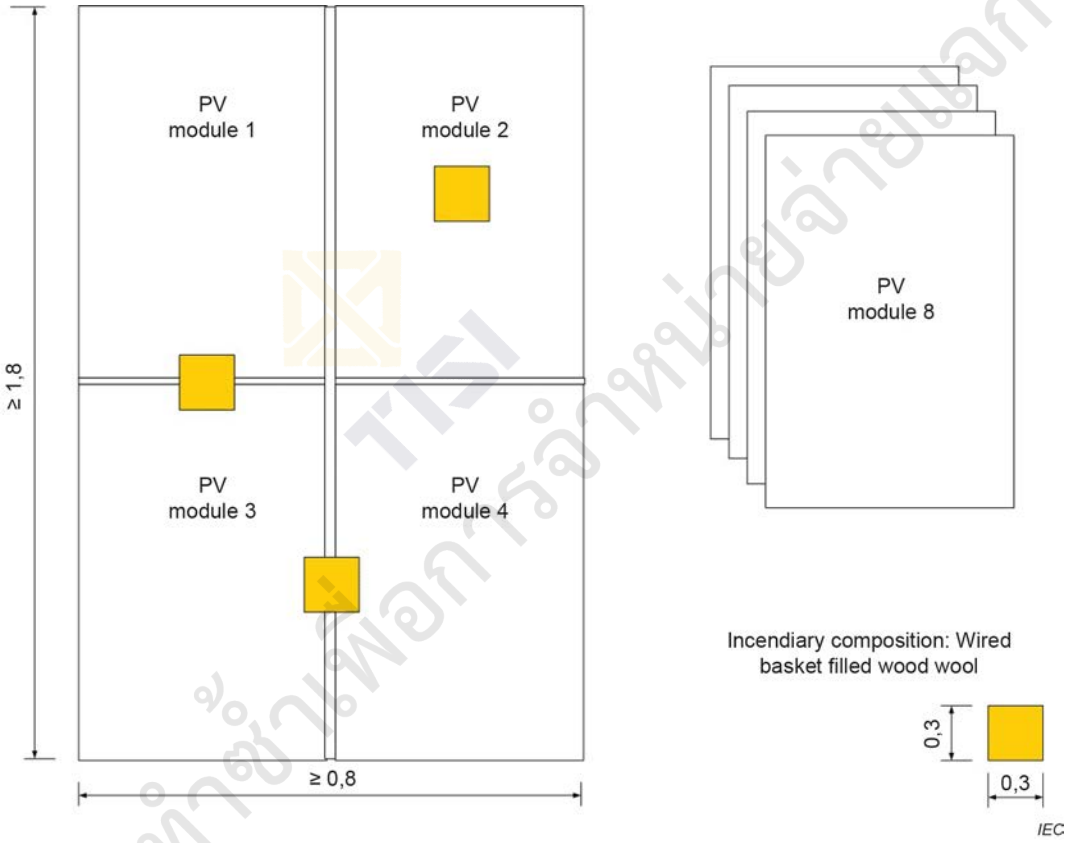

Figure B.1 – Example of test set-up for fire test

- Four PV modules are required for each test (if different pitch angles have to be considered, the amount of samples increases accordingly). One vertical and one horizontal joint on top of the roof and two centric applied incendiary compositions on one PV module are tested. Thereby fire passing and the influences of a possible lower functional layer as for example thermal insulation and sealing are tested.
- For building integrated PV modules the procedure of the positioning of the incendiary compositions shall be according to the above defined instructions for all ENV 1187 test methods.
- For building added PV modules the fire test can be limited to only one PV module and a centred brand, as long as there are no polymeric material used at interconnections (joints), mounting or frame parts.

B.2.3 Classification according to EN 13501-5

Classification criteria:

- External and internal fire spread up to < 0,7 m.
- External and internal fire spread down to < 0,6 m.
- Maximum burned external and internal length < 0,8 m.
- No burning material as flaming droplet and debris material of the fire exposed area.
- No burning or glowing pieces which pierce the roof construction.
- No openings (due to burning through) > 25 mm^2.
- Total amount of all openings due to burning through < 4 500 mm^2.
- Sideward fire spread does not reach the border of the test area.
- No internal glowing.
- Maximum radius of fire spread on horizontal roofs, external and internal < 0,2 m.

B.3 Fire test for PV modules based on ANSI/UL 61730-2

Fire resistance of PV modules installed on or over building rooftops has been proven to depend on more than just PV module flammability characteristics. In fact, fire resistance of PV modules is highly dependent on the combination and configuration of roofing materials, rack mounting systems, and the PV modules as a system. As a result of these findings, the PV system fire tests were developed to establish fire resistance classifications for PV systems consistent with the fire classification of roofing materials.

To reduce the number of tests required to cover every possible combination of PV modules with PV racking systems and roofing materials two new concepts were introduced:

a) Optional PV module typing that groups PV modules with similar constructions, flame spread characteristics and burning brand characteristics. This allows replacement of a PV module of a particular type with any PV module of the same type without affecting the PV system fire rating.

b) Use of common roofing materials for the test that meet specific performance requirements to represent all roofing materials. One set of roofing material construction and performance requirements has been established for steep-slope roof applications and another for low-slope roof applications.

PV system fire performance construction and PV module type requirements are detailed in ANSI/UL 61730-2. Test methods for PV system fire performance classifications are specified in ANSI/UL 61730-2.

PV modules intended to be integrated into a building structure (BIPV modules) are evaluated for fire classifications as roofing materials under UL 790 requirements as specified in ANSI/UL 61730-2.

To assess basic fire propagation behavior of PV modules not considering its mounting system ANSI/UL 61730-2 can be used.

Annex C
(normative)

Usage of representative samples for very large modules

A representative sample may be utilized if a module is "very large", as defined in IEC 61215-1. By this definition, a module is considered very large if it exceeds 2,2 m in any dimension, or exceeds 1,5 m in both dimensions.

Limits are placed on how much one may reduce the dimensions of a very large module in making representative modules for safety testing. The reduced dimension(s) shall be no less than one half the dimensions that define a very large module. In other words, when reducing the shorter dimension, the representative sample shall be at least 0,75 m wide. In reducing the longer dimension, the representative sample shall be at least 1,1 m long. Thus, a manufacturer is not allowed to use, for example, a one-cell mini-module for safety testing.

NOTE A "very large" module is taken to be anything that will not fit on the largest commercially-available AAA simulator, or in the necessary environmental chambers.

For very large modules, representative samples may be used for several safety tests. During the design and manufacturing of the representative samples, attention should be paid to achieve the maximum similarity to the full-size product in all electrical, mechanical, and thermal characteristics related to safety, quality and reliability

In particular, the representative sample shall fulfill and consider:

Manufacturing process:

Samples chosen for the tests shall comply with the requirements of Clause 6.

Similar production equipment shall be used.

Tabbing and stringing process shall be equal.

The same quality assurance tests shall be conducted.

Bill of material:

Identical bill of materials.

Insulation coordination

Same spacing (or less) between cells and between any live part and the edge of the module.

Same interconnection within the electrical circuity, e.g. the same number of cells per sub-string.

Same requirements for insulation in thin layers.

The goal is to design a representative sample that will be as similar as possible to the very large module with special attention to the stresses that may occur for the mechanical and electrical safety.

The individual designs of module manufacturers of very large modules may require a case-by-case decision regarding the feasibility of mechanical and electrical safety testing. The user of this standard shall survey the usage of a representative module with regards to whether a test can be performed equivalently or with a more critical requirement and note a justification for this in the respective test in the report.

Not each test can be performed at a representative sample, several tests have to be performed at full-size modules.

Table C.1 provides an overview for which tests representative samples are permitted and for which tests full size samples are mandatory.

Table C.1 – Overview of tests

Sublause	Test No. MST	Test designation	Samples
10.2	01	Visual inspection	Where representative samples are allowed during conditioning, MST 01 shall also be performed on these samples.
10.3	02	Performance at STC	Representative samples are permitted, but measurement uncertainty has to be considered. At least one full size module needs to be tested.
10.4	03	Maximum power determination	Representative samples are permitted.
10.5	04	Insulation thickness	Representative samples are permitted.
10.6	05	Durability of markings	Representative samples are permitted.
10.7	06	Sharp edge test	Test shall be performed on both full size as well as representative sample depending on the test sequences.
10.8	07	Bypass diode functionality	Test can be performed on representative sample.
10.9	11	Accessibility test	Test shall be performed on both full size as well as representative sample depending on the test sequences.
10.10	12	Cut susceptibility test	Representative samples are permitted.
10.11	13	Continuity test of equipotential bonding	Representative samples are permitted. For mechanical load test and module breakage test a full size sample is needed.
10.12	14	Impulse voltage test	Full size sample required
10.13	16	Insulation test	Test shall be performed on both full size as well as representative sample depending on the test sequences
10.14	17	Wet leakage current test	Test shall be performed on both full size as well as representative sample depending on the test sequences
10.16	22	Hot spot endurance test	Representative samples are permitted
10.18	24	Ignitability test	Representative samples are permitted as described in the standard
10.19	25	Bypass diode thermal test	Representative samples are permitted
10.20	26	Reverse current overload test	Full size sample is required
10.21	32	Module breakage test	Full size sample is required
10.22	33	Screw connection test	Representative samples are permitted
10.23	34	Static mechanical load test	Full size sample is required
10.24	35	Peel test	Peel samples as described in MST 35
10.25	36	Lap shear strength test	As described in MST 36
10.26	37	Materials creep test	Representative samples are permitted.
10.27	42	Robustness of terminations	Representative samples are permitted

Sublause	Test No. MST	Test designation	Samples
10.28	51	Thermal cycling test	Full size sample is required, unless there is a defined (by design) "break", e.g. – two parallel strings on glass – where two or more different modules are connected as 1 panel. See also Figure C.1 In case the two parts are connected in parallel the *I*mp can be halved, in case it has been connected in series the entire *I*mp shall be applied.
10.29	52	Humidity freeze test	Full size sample is required, unless there is a defined (by design) "break", e.g. – two parallel strings on glass – where two or more different modules are connected as 1 panel. See also Figure C.1
10.30	53	Damp heat test	Representative samples are permitted.
10.31	54	UV test	Representative samples are permitted
10.32	55	Cold conditioning	The samples as described for MST 52 are permitted
10.33	56	Dry heat conditioning	The samples as described for MST 52 are permitted
10.34	57	Evaluation or clearances and creepage distances	Full size sample is required.

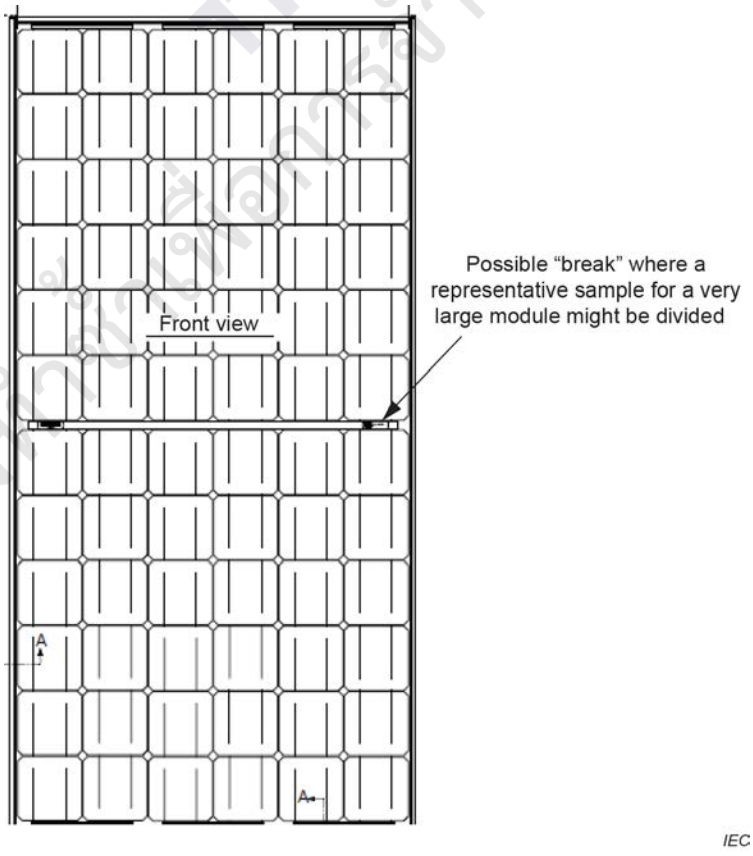

Figure C.1 – Example for a possible break

Bibliography

IEC 60335-1:2020, *Household and similar electrical appliances – Safety – Part 1: General requirements*

IEC TS 62446-3, *Photovoltaic (PV) systems – Requirements for testing, documentation and maintenance – Part 3: Photovoltaic modules and plants – Outdoor infrared thermography*

IEC TR 62854, *Sharp edge testing apparatus and test procedure for lighting equipment – Tests for sharpness of edge*

IEC TS 62916, *Photovoltaic modules – Bypass diode electrostatic discharge susceptibility testing*

IEC 62941, *Terrestrial photovoltaic (PV) modules – Quality system for PV module manufacturing*

IEC TS 63126, *Guidelines for qualifying PV modules, components and materials for operation at high temperatures*

EN 50380, *Marking and documentation requirements for Photovoltaic Modules*

UL 1439, *Tests for Sharpness of Edges on Equipment*

ห้ามทำซ้ำเพื่อการจำหน่ายแจก